iGarden

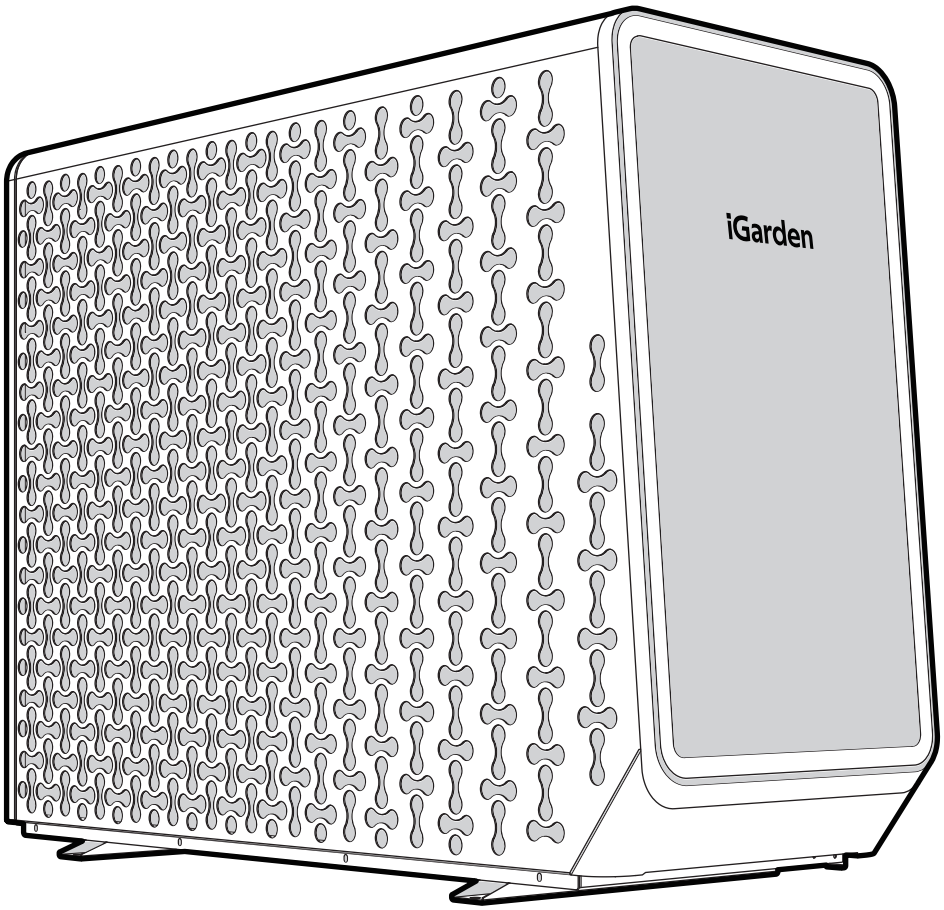

iGarden R-290 ATW Heat Pump X7

INSTALLER MANUAL

Please read this manual carefully before installing and operating your ATW Heat Pump, and keep this manual for future reference to ensure safe and effective use.

Contents

1 About this document 7
1.1 Meaning of warnings and symbols 7
1.2 Installer reference guide at a glance 8
2 General safety precautions 9
2.1 General 9
2.2 Installation location 13
2.3 Refrigerant-R290 14
2.4 Water quality 16
2.5 Electrical 17
3 Unit handling 19
3.1 Unit transportation 19
3.2 Unpacking the unit 21
3.3 Removing accessories box from the unit 22
4 About the unit 23
4.1 Identification 23
4.2 Layout of key functional components 24
4.3 Heating&Cooling Operation range 26
4.4 The data sheet of unit 27
5 Application guidelines 28
5.1 Capacity and load curve 28
5.2 DHW tank (field supply) 28
5.3 Buffer tank (field supply) 30
5.4 Expansion tank(field supply) 31
5.5 Hydraulic performance curve 33
5.6 Filter(field supply) 34
5.7 Safety valve(field supply) 34
5.8 Secondary water pump(field supply) 35
5.9 Typical applications 36
5.9.1 Controlled through the display 36
5.9.2 Controlled through the display and room thermostat 42
6 Unit installation 46
6.1 Precautions for installation 46
6.1.1 Precautions for installation on a ground 46
6.1.2 Precautions for installation on a flat roof 46
6.1.3 Occupational safety 47
6.2 Installation site requirements for the outdoor unit 47
6.3 Installation distance requirement for the outdoor unit 48
6.3.1 Single installation requirements 51
6.3.2 Cascade installation requirements 52
6.4 Special requirements for the outdoor unit 53
6.4.1 In cold climate 53
6.4.2 Strong wind 55
6.4.3 Seaside installation 56
6.4.4 Others 57

6.5 Foundation and installing the outdoor unit 57
6.5.1 Foundation 57
6.5.2 Unit mounting 58
6.6 Drainage 59
6.6.1 Drain hole position 60
6.6.2 Drainage layout 60
7 Hydraulic installation 63
7.1 Precautions for hydraulic installation 63
7.2 Water circuit requirements 64
7.3 Connecting water piping 66
7.3.1 About connecting the water piping 66
7.3.2 To connect the water piping 66
7.4 Filling water circuit 67
7.5 Freeze protection 67
7.5.1 Protected by software 67
7.5.2 Protected by glycol 67
7.5.3 Protected by anti-freeze valve 69
7.5.4 Others 69
7.6 Filling the domestic hot water tank 69
7.7 Water pipe insulation 70
8 Electrical installation 71
8.1 Opening the electrical box cover 71
8.2 Precautions for electrical wiring 71
8.3 Guidelines for connecting electrical wires 73
8.3.1 Field wiring guidelines 73
8.3.2 Circuit protector selection 74
8.3.3 Tightening torque 74
8.3.4 Back plate layout for connection 75
8.4 Connection with power supply 76
8.4.1 Precautions 76
8.4.2 Wiring of main power supply 77
8.5 Installation of wired controller 78
8.5.1 Materials and requirements for installing the wire controller 78
8.5.2 Dimensions 79
8.5.3 Wired controller installation and connection 80
8.6 Connection of other components 82
8.6.1 Wiring of additional heating source control (AHS) 84
8.6.2 Wiring of 3-way valves S3V1, S3V2 and S3V3 84
8.6.3 Wiring of additional pumps 85
8.6.4 Wiring of error signal and defrost signal 87
8.6.5 Wiring of TBH and IBH 87
8.7 Cascade wiring and dip switch 88
9 Display Operation Guide 89
9.1 Main Interface 91
9.1.1 ON/OFF 93
9.1.2 Adjusting Temperature 93
9.1.3 Air conditioning mode settings 94

9.1.4 Screen unlock 94
9.1.5 Power Mode Settings 95
9.2 Main menu 95
9.2.1 Analog Input Query Interface 96
9.2.2 Load Output Query Interface 97
9.3 Display Setting 98
9.3.1 Language Setting 98
9.3.2 Brightness setting 98
9.3.3 Screen saver 99
9.3.4 Alarm Sound Setting 99
9.3.5 Keypad buzzer 100
9.4 Time and Date 100
9.5 Timer setting 100
9.5.1 Timer on/off 101
9.5.2 Disinfection Function 103
9.5.3 Silent timer 104
9.5.4 DHW Pump Timer 104
9.6 WiFi Setup 105
9.7 User Parameter Settings 105
9.8 Manual Defrost 107
9.9 Force Open Function 107
9.9.1 Floor Heating Drying Function 108
9.9.2 Forced open auxiliary electric heater 108
9.9.3 Force open water tank heater 108
9.9.4 Forced open DHW mode 108
9.9.5 Force open external heat source 108
9.10 Holiday Mode 109
9.10.1 Holiday Away Mode 109
9.10.2 Holiday Stay-at-Home Mode 109
9.11 Fault Inquiry Interface 110
9.11.1 Current fault 110
9.11.2 Historical faults 111
9.12 Zone Settings 112
9.13 Power consumption 113
9.14 Advanced Setting 113
9.14.1 Parameters Config. 114
9.14.2 Manual test 115
9.14.3 Function Debug 115
9.14.4 Reset 115
10 Configuration 116
10.1 Overview: Configuration 116
10.2 Check before configuration 116
11 Commissioning 118
11.1 Overview: Commissioning 118
11.2 Precautions during commissioning 118
11.3 Checklist before commissioning 118
11.4 Checklist during commissioning 119

11.4.1 Water flow rate 119
11.4.2 Water pressure adjustment requirements 120
11.4.3 Air purge 120
11.4.4 Actuator test run 123
11.4.5 Unit test run 125
12 Hand-over to the user 126
12.1 Energy saving tips 126
13 Control and function 127
13.1 Temperature control 127
13.1.1 Heating/Cooling mode 127
13.1.2 DHW mode 128
13.2 DHW function 129
13.2.1 Whether DHW mode is enabled 129
13.2.2 Whether DHW PRIORITY is enabled 129
13.2.3 DHW mode ambient restriction 130
13.3 Cooling function 131
13.3.1 Whether cooling mode is enabled 131
13.3.2 Cooling mode ambient restriction 131
13.3.3 Cooling on/off operation 131
13.4 Heating function 132
13.4.1 Whether heating mode is enabled 132
13.4.2 Heating mode ambient restriction 132
13.4.3 Heating on/off operation 132
13.5 Automatic function 133
13.6 External heat source control logic 133
13.7 Electric heater control logic 134
13.7.1 Auxiliary electric heater control logic 134
13.7.2 DHW tank electric heater control logic 135
13.8 Water pump control logic 137
13.8.1 Main Circulation Pump(PUMPf) Control 137
13.8.2 Secondary Circulation Pump(PUMPo) Control 137
13.8.3 Mixing Pump(PUMPmix) Control 137
13.8.4 DHW Pump Control 137
13.8.5 Solar Water Pump Control 138
13.9 Three way valve control logic 138
13.9.1 DWH three-way valve control logic 138
13.9.2 Cooling three-way valve control logic 138
13.9.3 Mixing three-way valve control logic 138
13.9.4 Mixing valve control logic 138
13.10 Others 139
13.10.1 Scheduled disinfection function 139
13.10.2 Holiday away mode 139
13.10.3 Holiday stay mode 139
13.10.4 Crankcase electric heater control 139
13.10.5 Bottom electric heater control 140
13.10.6 Water circuit anti-freeze function 140
13.10.7 Anti-freeze function in cooling mode 141

13.10.8 Defrost control 141
13.10.9 Photovoltaic-linked function 142
14 Technical data 143
14.1 Refrigerant diagram 143
14.1.1 Heating/DHW Mode 143
14.1.2 Cooling/Defrosting 144
14.1.3 Key components 145
14.2 Electronic system 147
14.2.1 Electric wiring diagram 147
14.2.3 Temperature sensors 161
15 Maintenance and service 162
15.1 Safety precautions for maintenance 162
15.2 Tools used for maintenance 163
15.3 Yearly maintenance 167
15.3.1 Overview: Yearly maintenance outdoor unit 167
15.3.2 Maintenance checklist 167
15.4 Disassembly of structural components 168
15.4.1 Safety Precautions for maintenance 168
15.4.2 Removing the top cover 168
15.4.3 Removing the service panel 169
15.4.4 Removing the front frame 169
15.4.5 Removing the fan grille 170
15.4.6 Removing the support plate 170
15.4.7 Removing the water connection panel 171
15.5 Replacement of electrical components 172
15.5.1 Replacing the main board 172
15.5.2 Replacing the expansion board 173
15.5.3 Replacing the drive board 174
15.6 Service information 175
15.6.1 Label for refrigerant presence 175
15.6.2 Leak detection methods 175
15.6.3 Check of refrigeration equipment 175
15.6.4 Check of electrical devices 176
15.6.5 Repair of sealed components 176
15.6.6 Repair of intrinsically safe components 176
15.6.7 Transportation and marking 176
15.7 Repair of refrigerant cycle/brazing points 177
15.7.1 Preparation for refrigerant cycle/brazing repair 177
15.7.2 Pressure adjustment for vacuum pump 177
15.7.3 Checks to gas supply 178
15.7.4 Flame adjustment 178
15.7.5 Flame types 178
15.7.6 Shutting off the flame 179
15.7.7 Flux requirements 179
15.7.8 Nitrogen requirements 180
15.7.9 Checking brazing (insertion) points 180
15.7.10 Brazing and heating 181

15.7.11 Brazing terminology 181
15.7.12 Selection of brazing materials 182
16 Troubleshooting 183
16.1 Overview: troubleshooting 183
16.2 Precautions when troubleshooting 183
16.3 Solving problems based on symptoms 183
16.3.1 Symptom: The unit is NOT heating or cooling as expected 183
16.3.2 Symptom: Hot water does NOT reach the desired temperature 184
16.3.3 Symptom: The compressor does NOT start 184
16.3.4 Symptom: The system is making gurgling noises after commissioning 184
16.3.5 Symptom: The pump is making noise (cavitation) 185
16.3.6 Symptom: The pressure relief valve opens 185
16.3.7 Symptom: The water pressure relief valve leaks 186
16.3.8 Symptom: Insufficient space heating capacity at low outdoor temperature. 186
16.3.9 Symptom: The pressure at the tapping point is temporarily unusually high. 186
16.4 Troubleshooting Based on error codes 187
16.4.1 E1 Troubleshooting 190
16.4.2 E7 Troubleshooting 191
16.4.3 E12, E80 Troubleshooting 192
16.4.4 E104, E105, E182 Troubleshooting 194
16.4.5 E101, E102, E108, E109, E161, E168, E171 Troubleshooting 196
16.4.6 E83 Troubleshooting 198
16.4.7 E124 Troubleshooting 200
16.4.8 E178 Troubleshooting 202
16.4.9 E103 Troubleshooting 204
16.4.10 E97 Troubleshooting 206
16.4.11 E98 Troubleshooting 208
16.4.12 E115 Troubleshooting 210
16.4.13 E118 Troubleshooting 212
16.4.14 E164 Troubleshooting 214
16.4.15 E166 Troubleshooting 216
16.4.16 E167 Troubleshooting 218
16.4.17 E10 Troubleshooting 220
16.4.18 E169 Troubleshooting 222
16.4.19 E174 Troubleshooting 227
16.4.20 Fault recovery ways 229
17 Disposal 230
17.1 General 230
17.2 Packaging 230
17.3 Refrigerant Handling 230
17.3.1 Removal and evacuation 230
17.3.2 Charging procedures 230
17.3.3 Recovery 230
17.3.4 Decommissioning 231
18 Check list 232

1 About this document

1.1 Meaning of warnings and symbols



DANGER

Indicates a high-risk situation that may lead to death or serious injury.



DANGER: RICK OF ELECTROCUTION

Indicates a situation which may lead to electric shock.



DANGER: RICK OF EXPLOSION

Indicates a situation which may lead to an explosion.



DANGER: RICK OF BURNING/SCALDING

Indicates a situation that may lead to burning/scalding due to extremely hot or cold temperatures.



WARNING

Indicates a situation that may lead to death or serious injury.



WARNING: FLAMMABLE MATERIAL

This symbol shows that this appliance used a flammable refrigerant. If the refrigerant is leaked and exposed to an external ignition source, there is a risk of fire.



CAUTION

Indicates a situation that may lead to mild to moderate injuries.



NOTICE

Indicates a situation that could result in equipment or property damage.



INFORMATION

Indicates useful tips or additional information.

Symbol	Description
	This symbol shows that information is available such as the operating manual or installation manual.
	This symbol shows that only a competent service personnel should be handling this equipment with reference to the technical manual.

	This symbol shows that the manual should be read carefully.
	This symbol shows that the unit contains rotating parts. Be careful when servicing or inspecting the unit.

1.2 Installer reference guide at a glance

Chapter	Description
About This Document	Tell the installer what information they can get.
General Safety Precautions	Safety instructions that you must read before installing
Unit Handling	- How to transport the unit - How to unpack the units and remove their accessories
About The Unit	Learn about the basic information of the unit
Application guidelines	Various installation setups of the system
Unit Installation	What to do and know to install the system, including information on how to prepare for an installation
Hydraulic Installation	What to do and know to install the piping of the system, including information on how to prepare for an installation
Electrical Installation	What to do and know to install the electrical components of the system, including information on how to prepare for an installation
Configuration	What to do and know to configure the system after it is installed
Commissioning	What to do and know to commission the system after it is configured
Hand-over to the user	What to give and explain to the user
Control and Function	Introduction to the functions and control logic of the unit
Technical Data	More detailed information about the unit
Maintenance and Service	How to maintain and service the units
Troubleshooting	What to do in case of problems
Disposal	How to dispose of the system
Check list	Checklist after completing all steps of unit installation

2 General safety precautions

2.1 General

- Please carefully read the following "Safety Precautions" when installation, service, maintenance, repair and decommissioning of appliances using flammable refrigerant.
- This appliance employed A3 flammable refrigerant R290 and shall be stored in such a way that it does not cause mechanical damage.
- The precautions specified here must be observed as they contain important safety-related information. The meaning of each indication used is shown below. Incorrect installation resulting from disregarding or neglecting the instructions may cause injury or damage, the severity of which is classified according to the following indications.
- Perform a test run to confirm that no abnormalities occur after installation. Then, explain to the user about operation, care, and maintenance as described in the instructions. Remind the customer to keep the operating instructions for future reference.
- If you are in doubt about the installation process or operation, please contact your authorized distributor for advice and information.

 **DANGER**
1. These instructions are exclusively intended for qualified contractors and authorized installers.
2. Work on the refrigerant circuit with flammable refrigerant in safety group A3 may only be carried out by authorized heating contractors. These heating contractors must be trained in accordance with EN 378 Part 4 or IEC 60335-2-40, Section HH. The certificate of competence from an industry accredited body is required.
3. Brazing/soldering work on the refrigerant circuit may only be carried out by personnel certified in accordance with ISO 13585 and AD 2000, Datasheet HP 100 R. And only contractors qualified and certified for the processes can perform brazing/soldering work. The work must fall within the range of applications purchased and be carried out in accordance with the prescribed procedures. Soldering/brazing work on accumulator connections requires certification of personnel and processes by a notified body according to the Pressure Equipment Directive (2014/68/EU).
4. Only a qualified electrician can perform the work on the electrical equipment.
5. Before initial commissioning, all safety-related points must be checked by the particular certified heating contractors. The system must be commissioned by the system installer or a qualified person authorized by the installer.
6. Risk of explosion: The leakage of refrigerant can create a combustible or explosive atmosphere in the surrounding air. The following precautions shall be taken to prevent fire and explosion within the security area: – Keep ignition sources away from naked fires, plug sockets, hot surfaces, light switches, lamps, electric appliances that do not have an ignition source, mobile appliances with built-in batteries (for example, cell phones and fitness watches). – Do not use any sprays or other flammable gases in the safe area.
7. Contact with live components can lead to serious injuries. Some components on PCBs may remain live even after the power supply is turned off. Before removing the appliance covers, wait at least 4 minutes to allow the voltage to drop completely. – Prevent the system from being reconnected. – Wear appropriate personal protective equipment when performing any work.

– Never touch switches or electrical parts with wet fingers, as this could cause electric shock and damage the system.
8. Hot surfaces and fluids can cause burns or scalds, while cold surfaces may lead to frostbite. – Before performing servicing or maintenance, turn off the equipment and let it cool down or warm up. – Do not touch hot or cold surfaces on the appliance, its fittings, or pipework.
9. Escaping refrigerant may cause fires and explosions, potentially leading to severe injuries or even death. - Do not drill into or apply heat to a refrigerant circuit that contains refrigerant. - Do not operate Schrader valves unless a fill valve or extraction equipment is connected. Take steps to prevent electrostatic charges. - Do not smoke. Avoid open flames and sparks. Never switch lights or electrical appliances on or off in environments where open flames or sparks are present. - Components that contain or have contained refrigerant must be labeled and stored in well-ventilated areas, following relevant regulations and standards.
10. Direct contact with liquid or gaseous refrigerant can cause serious health harm, such as frostbite and/or burns. Inhaling liquid or gaseous refrigerant also carries a risk of asphyxiation. - Avoid direct contact with liquid or gaseous refrigerant. - Wear personal protective equipment when handling liquid or gaseous refrigerant. - Never inhale refrigerant vapor.
11. Refrigerant is under pressure: mechanical loading of lines and components can cause leaks in the refrigerant circuit. Do not apply loads to the lines or components, such as supporting or placing tools.
12. The hot or cold metallic surfaces of the refrigerant circuit can cause burns or frostbite upon skin contact. Wear personal protective equipment to guard against such injuries.
13. Damage to the refrigerant circuit can allow refrigerant to enter the hydraulic system. After completing the work, properly vent the hydraulic system. When doing so, ensure the area is adequately ventilated.
14. Refrigerant leaks can cause fires and explosions, potentially resulting in severe injuries or death. Inhaling refrigerant may also lead to asphyxiation. - Ensure excellent ventilation, particularly in the floor area around the outdoor unit. - Do not smoke. Avoid open flames and sparks. Never switch lights or electrical appliances on or off in environments where open flames or sparks are present. - Evacuate all people from the hazardous area. - From a safe location, turn off the power supply for all system components. - Remove ignition sources from the hazardous area. - System users should be aware that no ignition sources may be brought into the hazardous area during repairs. - Repair work must be performed by an authorized contractor. - Do not recommission the system until it has been repaired.
15. If water leaks from the appliance, there is a risk of electric shock. Turn off the heating system via the external isolator (e.g., fuse box, domestic distribution board).
16. If water leaks from the appliance, scalding could occur. Under no circumstances should you touch hot water.
17. Refrigerant leaks can trigger fires and explosions, leading to severe injuries or even death. Inhaling refrigerant may also cause asphyxiation. Store the outdoor unit under the following conditions: - A storage explosion prevention plan must be established. - Ensure the storage area is well-ventilated. - Keep it away from ignition sources (avoid exposure to heat and smoking). - Storage temperature range: –25°C to 70°C

- The outdoor unit must be stored only in its original factory protective packaging. - Protect the outdoor unit from damage. - The maximum number of outdoor units that can be stored in one location is determined based on local conditions.
18. It is strongly recommended to install a residual current device (RCD) on-site according to respective national wiring rules or country-specific safety measures for residual current.
19. This heat pump is designed for use solely with closed water systems. Using it in an open water system may cause excessive corrosion of water pipes and raise the risk of bacterial growth in the water, particularly Legionella.
20. If you have any doubts about the installation process or operation, always consult an authorized dealer for guidance and information.
21. Choose a suitable location where, in case of water leakage, no damage will be inflicted on other property.
22. In line with electrical installation standards, when installing electrical equipment on wooden buildings with metal lath or metal wire lath, no electrical contact between the equipment and the building is permitted. Insulators must be installed between them.
23. This installation may require approval under country-specific building regulations, and it may be necessary to notify local authorities prior to installation.
24. Any work done on the heat pump after removing the screw-secured front panel must be conducted under the supervision of an authorized dealer and a licensed installation contractor.
25. The heat pump must be properly grounded. Electrical ground connections must not be linked to gas pipes, water pipes, lightning rods, or telephone ground wires. Otherwise, if the heat pump suffers insulation breakdown or grounding failure, there will be a risk of electric shock.

WARNING
1. Do not use any methods to accelerate defrosting or clean the appliance other than those recommended by the manufacturer.
2. The appliance shall be stored in a room with no continuously operating ignition sources (such as open flames, a running gas appliance, or a running electric heater).
3. Be aware that refrigerants might not contain an odour.
4. Any work procedure that affects safety devices shall only be carried out by competent persons. Examples of such work procedures include: – Breaking into the refrigeration circuit; – Opening sealed components; – Opening ventilated enclosures.
5. Protective devices, piping, and fittings shall be protected to the greatest extent possible against adverse environmental effects, such as the risk of water pooling and freezing in relief pipes, or the buildup of dirt and debris.
6. Measures must be taken to accommodate expansion and contraction in long pipe runs.
7. Piping in refrigeration systems must be designed and installed to minimize the risk of hydraulic shock causing damage to the system.
8. Steel pipes and components must be protected from corrosion with a rustproof coating prior to applying any insulation.
9. Sealed electrical components must not be repaired.
10. If electrical cables are short, a leak in the refrigerant circuit could allow gaseous refrigerant to enter the building. Minimum length of electrical connecting cables between the indoor and outdoor units: 3 m.

11. To avoid potential risks from refrigerant leaks, always maintain a 2-meter distance from the unit—especially for children—whether the unit is in operation or not.
12. Installation work requires four or more people. If moved by fewer than four people, the heat pump's weight could cause injury.
 **CAUTION**
1. Servicing shall be carried out only as recommended by the manufacturer.
2. Oxygen-free nitrogen (OFN) shall be purged through the system both before and during the brazing process.
3. An inert gas—specifically dry oxygen-free nitrogen (OFN)—shall be used to flush the system to render the unit safe. This process may need to be repeated several times.
4. This operation is absolutely critical when performing brazing work on the pipework.
5. Any form of improper use is prohibited: – Do not rinse the unit. – Do not place any objects or equipment on top of the unit (top plate). – Do not climb, sit, or stand on top of the unit.
6. Permissible tools: All tools used in the safety zone must be designed and explosion-protected in compliance with applicable standards and regulations for refrigerants in safety groups A2L and A3. Examples include brushless machines (such as cordless tools, disposal containers, installation aids, and screwdrivers), extraction equipment, vacuum pumps, conductive hoses, and non-sparking mechanical tools.
7. Tools must also be suitable for the pressure ranges in use and maintained in proper working condition. – Electrical equipment must meet the requirements for explosive-risk areas (Zone 2). – Do not use flammable materials such as sprays or other flammable gases. Before starting work, discharge static electricity by touching earthed objects (e.g., heating or water pipes). – Do not remove, block, or bridge safety devices. – No modifications are permitted: Do not alter the outdoor unit, inlet/outlet lines, electrical connections/cables, or surrounding areas. Do not remove any components or seals.
8. When working on systems using flammable refrigerants, technicians should identify certain locations as "temporary flammable zones." These are typically areas where refrigerant emissions are expected during normal operations (e.g., recovery, charging, or evacuation), such as points where hoses are connected or disconnected.
9. In case of accidental refrigerant release that could form a flammable mixture with air, technicians must ensure a 3-meter safety working area (with the unit as the center).
10. For the primary water circulation loop: – Do not install air vent valves indoors. If indoor installation is unavoidable, ensure no ignition sources are present near the valve. – Ensure the outlet of the indoor safety valve leads outdoors, with no ignition sources nearby.
11. For the secondary water circulation loop (e.g., domestic hot water/DHW loop): Follow general rules for installing air vent valves and safety valves. For outdoor installations, two scenarios must be considered to prevent system damage, refrigerant releases, and other adverse effects: – Equipment located in public-access areas; – Equipment located in restricted areas, accessible only to authorized personnel.
12. Freezing can damage the heat pump. – Thermally insulate all hydraulic lines. – Antifreeze may be added to the secondary circuit in compliance with local regulations and standards.

13. Repairing components with safety functions may compromise the system's safe operation. – Replace faulty components only with genuine manufacturer-supplied spare parts. – Do not repair inverters; replace them if defective. – Repair work must not be performed on-site. Units should be repaired at a designated location.
14. Spare and wearing parts that have not been tested alongside the system may impair the system's functionality. Installing unauthorized components or making unapproved modifications or conversions can compromise safety and may void our warranty. Only use original spare parts supplied or approved by the manufacturer for replacements.
15. Direct contact with liquid or gaseous refrigerant can cause severe health damage, such as frostbite and/or burns. Inhaling liquid or gaseous refrigerant may result in asphyxiation. – Avoid direct contact with liquid or gaseous refrigerant. – Never inhale refrigerant vapors.
16. Ice buildup in the condensate pan and fan area of the outdoor unit can damage the equipment. – Do not use mechanical tools or aids to remove ice. – Before using electrical heating appliances, check the refrigerant circuit for leaks using an appropriate measuring device. The heating appliance must not be an ignition source and must comply with the requirements of EN 60335-2-30. – If ice regularly forms on the outdoor unit (e.g., in areas with frequent frost and heavy fog), install a fan ring heater suitable for refrigerant R290 and/or an electric ribbon heater in the condensate pan.
17. Fires involving R290 must be extinguished only with CO_2 or dry powder extinguishers.

2.2 Installation location

1. The unit must be installed outdoors only.
2. Avoid installing the unit in areas where the ambient temperature may drop below -30℃.
3. The heat pump must be installed on a flat and solid surface.
4. Avoid locations with heat sources or steam that could affect the heat pump's operation.
5. Ensure sufficient space is provided around the unit for servicing and air circulation.
6. Ensure the installation site can withstand the unit's weight and vibration.
7. Ensure the area is well-ventilated. Do NOT block any ventilation openings.
8. Ensure the unit is level.
9. Select a location with easy drainage.
10. Select a location where the heat pump's operating noise will not cause discomfort to users.
11. Select a location convenient for maintenance.
12. Maintain the minimum required distances from walls, ceilings, or other obstacles.
13. Select a location where flammable gas leakage is unlikely to occur.
14. Select a location where the heat pump's piping and wiring lengths are within reasonable limits.
15. If installing an awning over the heat pump to protect it from direct sunlight or rain, take care not to block heat radiation from the heat exchanger.
16. Do NOT install the unit in the following locations:

- In potentially explosive atmospheres.
- In locations with machinery that emits electromagnetic waves, as such waves may interfere with the control system and cause equipment malfunction.
- In locations with a fire risk due to leakage of flammable gases (e.g., thinner or gasoline), carbon fiber, or ignitable dust.
- In locations where corrosive gases (e.g., sulfurous acid gas) are generated, as corrosion of copper pipes or soldered components could cause refrigerant leakage.

17. Avoid installing the heat pump in locations where the intake side may be directly exposed to wind.

18. If the heat pump is installed near the sea (a high-sulfur area) or in oil-containing environments (e.g., areas with machine oil), its service life may be shortened.

19. When the heat pump is installed in locations subject to typhoons or strong winds—such as between buildings, on rooftops, or in open areas without surrounding structures—secure the unit with anti-toppling wires or similar measures.

20. The heat pump becomes extremely heavy when filled with water. Install the unit on a solid concrete surface, considering the combined weight of the unit and the water.

21. Secure the unit to the concrete floor at 4 points using M12 anchor bolts.

22. The pull-out strength of these anchor bolts must exceed 15,000 N.

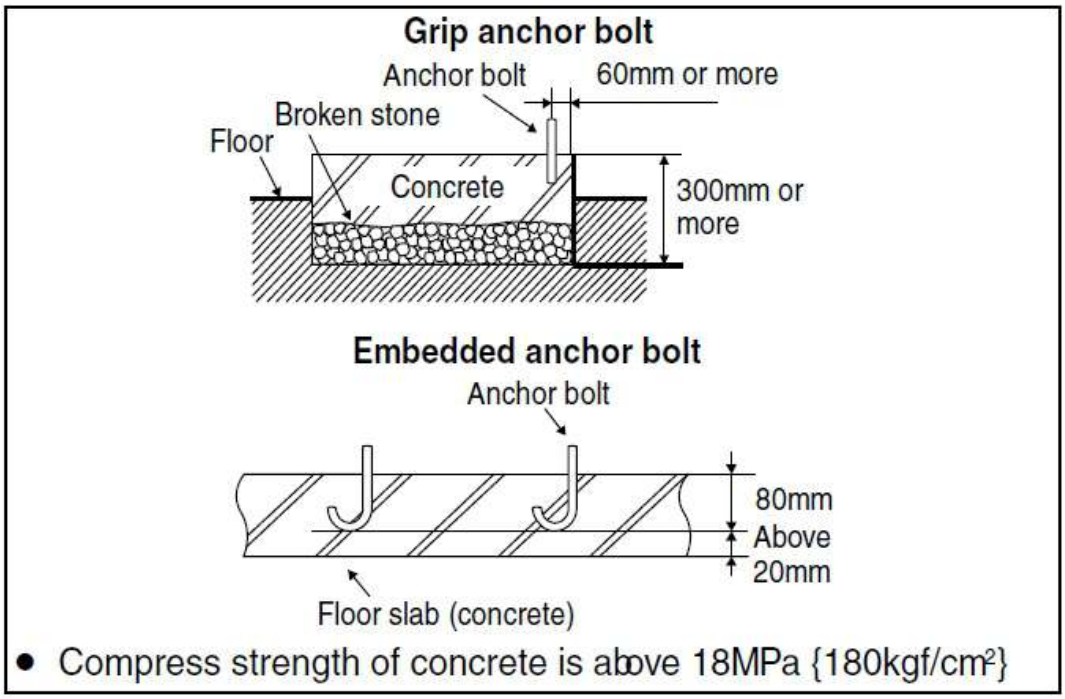

Illustration of grip type and embedded type anchor bolt

2.3 Refrigerant-R290

DANGER: RICK OF EXPLOSION
Pump down-Refrigerant leakage. If you want to pump down the system, and there is a leak in the refrigerant circuit: – Do NOT use the unit's automatic pump down function, which is designed to collect all refrigerant from the system into the outdoor unit. **Possible consequence**: Self-combustion and explosion of the compressor because of air going into the operating compressor. – Use a separate recovery system to avoid operating the unit's compressor.
DANGER
1. Due to lower working pressure than that of R32 or R410A refrigerants, some pipes and installation and service tools are specialized.
2. Mixing different refrigerants in a system is prohibited.
3. Ensure no foreign substances (such as oil, water, etc.) enter the piping.
4. Operation, maintenance, repair, and refrigerant recovery must be performed by trained and certified

personnel familiar with the use of flammable refrigerants, as recommended by the manufacturer. Any individual operating, servicing, or maintaining the system or its associated parts must be trained and certified.
5. No part of the refrigeration circuit (including evaporators, air coolers, AHUs, condensers, or liquid receivers) or piping shall be positioned near heat sources, open flames, operating gas appliances, or operating electric heaters.
6. The user/owner or their authorized representative shall regularly inspect alarms, mechanical ventilation, and detectors—at least once a year (in accordance with national regulations)—to ensure they function properly.
7. A logbook must be maintained, and the results of these inspections shall be recorded in it.
8. Ventilation in occupied spaces shall be inspected to confirm there are no obstructions.
9. Before a new refrigeration system is put into service, the person responsible for commissioning the system must ensure that trained and certified operators receive instruction (based on the instruction manual) on the system's construction, supervision, operation, and maintenance, as well as the safety measures to be observed. They must also be familiarized with the properties and handling methods of the refrigerant used.
10. Trained and certified personnel must meet the following general requirements: – Knowledge of laws, regulations, and standards related to flammable refrigerants; – Detailed knowledge and skills in handling flammable refrigerants, using personal protective equipment, preventing refrigerant leaks, handling cylinders, charging, leak detection, recovery, and disposal; – Ability to understand and apply national laws, regulations, and standards in practice; – Participation in regular ongoing training to maintain this expertise.
11. Protect the refrigeration system from accidental damage (e.g., rupture) caused by moving furniture or renovation activities.
12. To ensure tightness, technicians must test field-fabricated refrigerant joints for leaks indoors using a method with a sensitivity of 5 grams per year or better. Testing shall be conducted at a pressure of at least 0.25 times the maximum allowable pressure (>1.04 MPa, maximum 4.15 MPa), with no leakage permitted.
13. Take adequate precautions against refrigerant leaks. If refrigerant gas leaks, ventilate the area immediately. Potential risks include: – Excessive refrigerant concentration in an enclosed space may cause oxygen depletion; – Toxic gases may form if refrigerant gas comes into contact with fire.
14. Refrigerant must always be recovered; do not release it directly into the environment. Use a vacuum pump to evacuate the installation.
15. Ensure no oxygen is present in the system. Refrigerant may only be charged after completing the leak test and vacuum drying. **Possible consequence**: Self-combustion and explosion of the compressor because of oxygen going into the operating compressor.
16. Immediately close the refrigerant tank valve when finishing or pausing the charging process. Failure to close the valve promptly may result in additional refrigerant being charged due to residual pressure. **Possible consequence**: Incorrect refrigerant amount.
NOTICE
1. If recharging is required, refer to the unit's nameplate, which specifies the refrigerant type and required quantity.
2. To prevent compressor failure, do not charge more refrigerant than the specified amount.
3. When opening the refrigerant system, refrigerant must be handled in compliance with applicable laws

and regulations.
4. Ensure refrigerant piping installation meets applicable regulations. In Europe, the relevant standard is EN378.
5. Ensure field piping and connections are not subjected to stress.
6. After all piping is connected, check for gas leaks using nitrogen for leak detection.
7. The unit is factory-charged with refrigerant; some systems may require additional charging based on pipe size and length.
8. Use only tools designed exclusively for the refrigerant type in the system to ensure pressure resistance and prevent foreign materials from entering the system.

2.4 Water quality

CAUTION
If a potable water source is used to supply water to the equipment, a backsiphonage prevention device should be installed between the potable water source and the equipment.
NOTICE
1. Ensure water quality complies with EU Directive 2020/2184.
2. If necessary, install a water softener to reduce water hardness.
3. Circulators operate effectively only with clean, high-quality tap water.
4. Poor-quality water poses a risk of material damage.
5. The most common factors that can affect circulators and the system include oxygen, limescale, sludge, acidity levels, and other substances (such as chlorides and minerals).
6. In addition to water quality, proper installation is also crucial. The heating system must be airtight, and materials should be selected that are resistant to oxygen diffusion (to prevent corrosion...).

Cleanliness

Before connecting the unit to a water supply, thoroughly clean the system using specific products effective at removing residues or impurities that could impair its functionality. Existing systems must be free of sludge and contaminants, and protected against build up.

New systems

For new installations, it is essential to flush the entire system (with the circulator uninstalled) before commissioning the central system. This removes residues from the installation process (such as welding debris, waste, and joint compounds) and preservatives (including mineral oil). The system must then be filled with clean, high-quality tap water.

Existing systems

If a new boiler or heat pump is installed in an existing heating system, the system must be rinsed to eliminate particles, sludge, and debris. Drain the system before installing the new unit. Dirt can only be removed with an adequate water flow; each section must then be flushed separately. Special attention must also be paid to "blind spots" where dirt tends to accumulate due to reduced water flow. The system must then be filled with clean, high-quality tap water. If water quality remains unsatisfactory after rinsing, measures must be taken to prevent issues. One option is to install a strainer: various types are available, including mesh strainers (designed to catch large dirt particles, typically placed in areas with higher flow) and tissue strainers (for capturing finer particles).

The water quality standards applicable to this unit are shown in the figure below.

Corrosion resistance of stainless steel and brazed materials in tap water at room temperature

Attention: + :Good corrosion resistance under normal conditions

0 :There may be corrosion problems

- :Not recommended

Condition			Plate material			Brazing material		
Moisture	Concentration	Time limit	AISI 304	AISI 316	254 SMO	Copper	Nickel	SS
Alkalinity (HCO3)	<70	24h	+	+	+	0	+	+
	70-300		+	+	+	+	+	+
	>300		+	+	+	0/ +	+	+
Sulfate (So42-)	<70	unlimited	+	+	+	+	+	+
	70-300		+	+	+	0/-	+	+
	>300		+	+	+	-	+	+
HCO-/SO 2-	>1 .0	unlimited	+	+	+	+	+	+
	<1 .0		+	+	+	0/-	+	+
Electrical conductivity	<10	unlimited	+	+	+	0	+	+
	10-500		+	+	+	+	+	+
	>500		+	+	+	0	+	+
pH	<6 .0	24h	0	0	0	0	+	0
	6.0-7.5		+	+	+	0	+	+
	7.5-9		+	+	+	+	+	+
	>9		+	+	+	0	+	+
Ammonium (NH4+)	<2	24h	+	+	+	+	+	+
	2-20		+	+	+	0	+	+
	>20		+	+	+	-	+	+
Chloride (Cl-)	<10	unlimited	+	+	+	+	+	+
	100-200		0	+	+	+	+	+
	200-300		-	+	+	+	+	+
	>300		-	-	+	0/ +	+	-

2.5 Electrical

DANGER: RICK OF ELECTROCUTION
1. Before removing the switch box cover, connecting electrical wiring, or touching electrical components, turn off all power supplies.
2. Before servicing, disconnect the power supply for more than 10 minutes and measure the voltage at the terminals of main circuit capacitors or electrical components. You may only touch electrical components if the voltage is less than 50 V DC. Refer to the wiring diagram for the terminal locations.
3. Do not touch electrical components with wet hands.
4. Do not leave the unit unattended when the service cover is removed.
WARNING
1. If not factory-installed, a main switch or other disconnection device must be installed in the fixed wiring. This device must provide contact separation in all poles to ensure full disconnection under overvoltage

category III conditions.
2. Ensure on-site wiring complies with applicable regulations.
3. All on-site wiring must be carried out in accordance with the wiring diagram supplied with the product.
4. Never squeeze bundled cables, and ensure they do not come into contact with piping or sharp edges. Also, ensure no external pressure is applied to terminal connections.
5. Be sure to install earthing wiring. Do not earth the unit to a utility pipe, surge absorber, or telephone earth. Inadequate earthing may cause electric shock.
6. Use a dedicated power circuit. Never use a power supply shared with another appliance.
7. Install the required fuses or circuit breakers.
8. Install an earth leakage protector. Failure to do so may result in electric shock or fire.
9. When installing the earth leakage protector, ensure it is compatible with the inverter (resistant to high-frequency electrical noise) to prevent unnecessary tripping.
10. After completing electrical work, verify that all electrical components and terminals inside the electrical component box are securely connected.
11. Ensure all covers are closed before starting the unit.
CAUTION
1. When connecting the power supply: First connect the earth cable, then make the current-carrying connections.
2. When disconnecting the power supply: First disconnect the current-carrying cables, then separate the earth connection.
3. The length of the conductors between the power supply stress relief and the terminal block must be such that if the power supply is pulled loose from the stress relief, the current-carrying wires will be tautened before the earth wire.
NOTICE
1. Precautions when laying power wiring: 
2. Do not connect wires of different thicknesses to the power terminal block (looseness in the power wiring may cause abnormal heating).
3. When connecting wires of the same thickness, follow the method shown in the figure above.
4. For wiring, use the designated power wire, connect it firmly, and then secure it to prevent external pressure from being exerted on the terminal board.
5. Use an appropriate screwdriver to tighten the terminal screws. A screwdriver with an overly small head will damage the screw head, making proper tightening impossible.
6. Over-tightening the terminal screws may cause them to break.
7. Install power cables at least 1 meter away from televisions or radios to prevent interference. Depending on the radio waves, a 1-meter distance may not be sufficient.

3 Unit handling

Please note the following:

- Upon delivery, the equipment must be inspected for damage and completeness. Any damaged or missing parts must be reported immediately to the carrier's claims agent.
- Move the packed unit as close as possible to its final installation position to prevent damage during transport.
- Prepare the path in advance that you plan to use to move the equipment to its final installation location.

3.1 Unit transportation

CAUTION
1. To avoid injury, do not touch the unit's air intake or aluminum fins.
2. Ensure the outdoor unit remains stable during transportation to prevent it from falling.

Crane

Keep the slings within the marked area to not damage the unit.

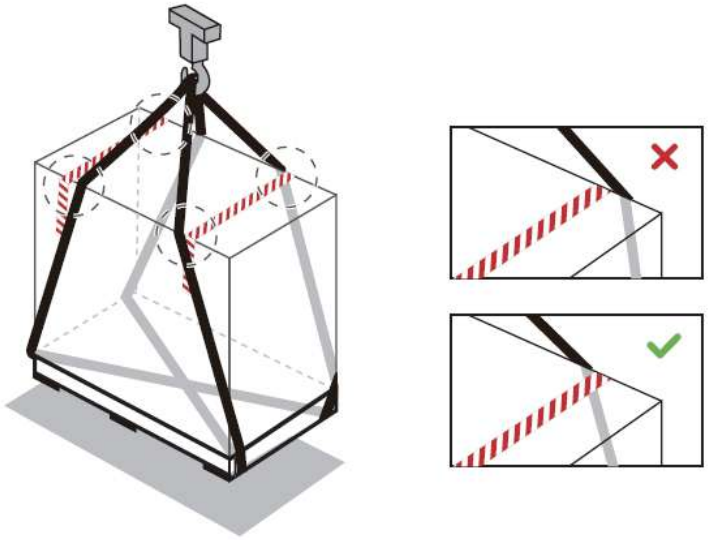

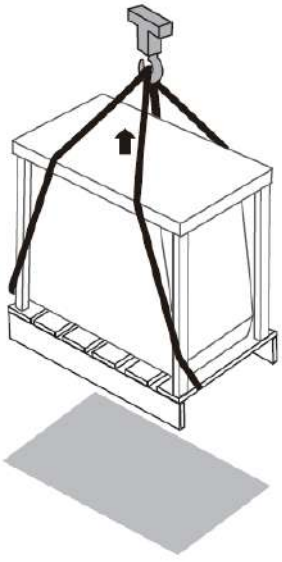

Forklift or pallet truck

Enter the pallet from the heavy side.

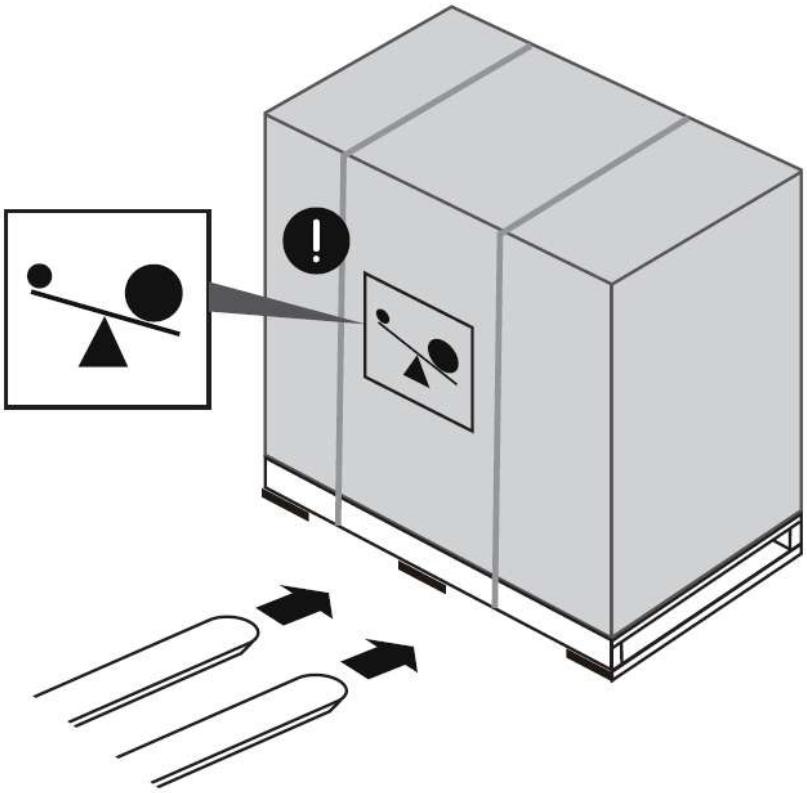

Manually

After unpacking, carry the unit using the slings attached to the unit.

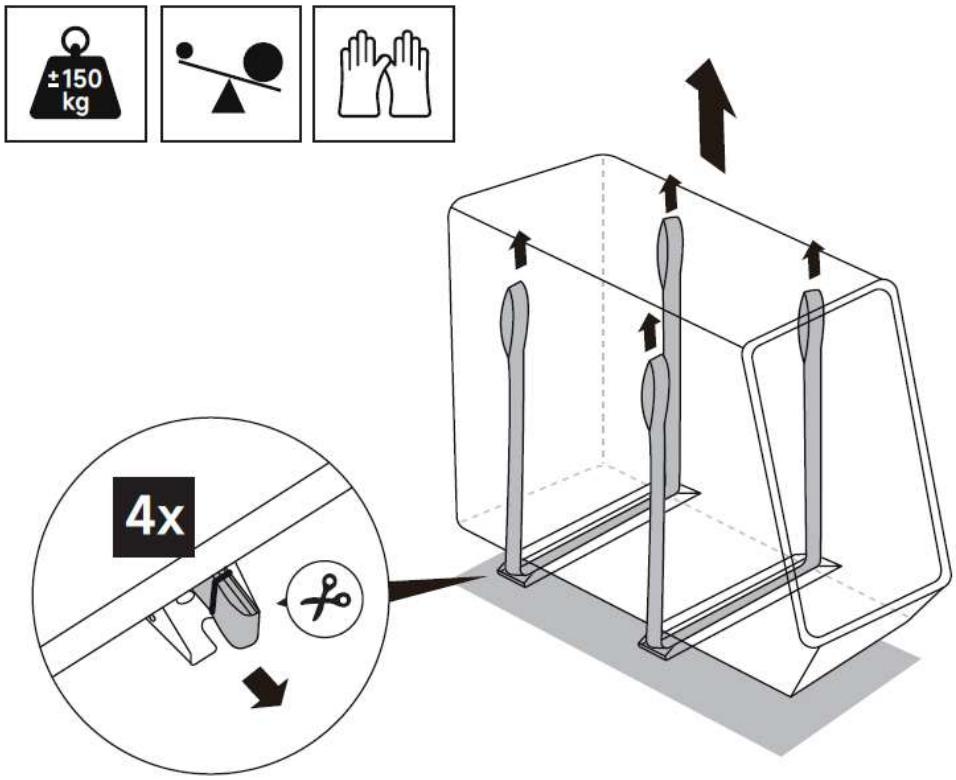

3.2 Unpacking the unit

①: Cut the straps around the outer packaging of the carton.

②: Remove the outer packaging straps.

③: Take out the accessory box.

④: Unpacking is complete.

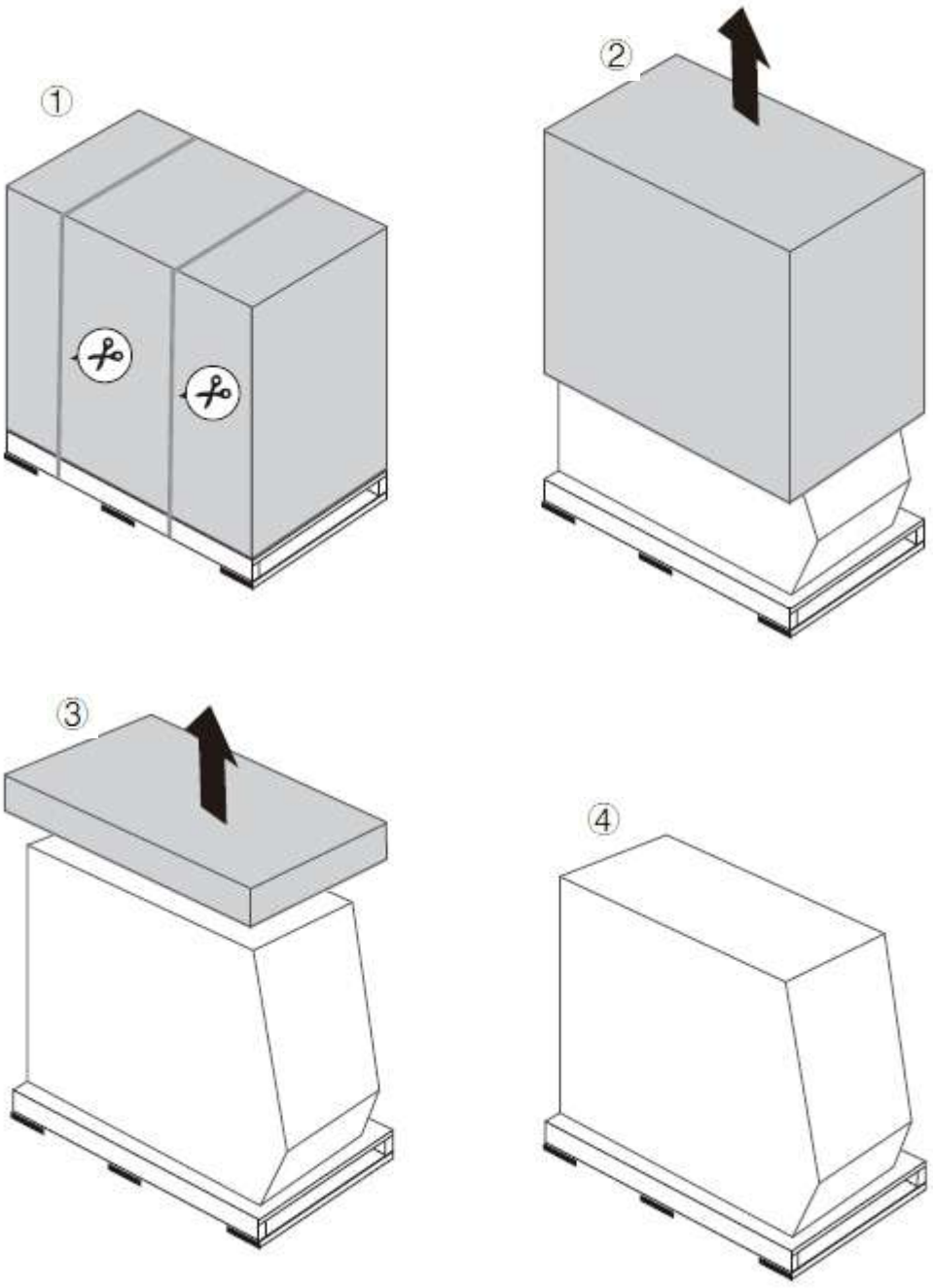

3.3 Removing accessories box from the unit

The accessory box contains:

a: Rubber feet x4

b: Drain connector x1

c: Display extension cable x1

d: Water tank sensor x2

e: Display x1

f: Screws x2

g: Wall-mounted panel x1

h: Anti-freeze Valve (option) x1

I: Refrigerant leakage detector(option) x1

Accessories of the unit			
Name	**Illustration**	**Quantity**	**Specification**
Rubber Feet	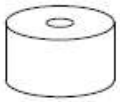	4	-
Drain Connector	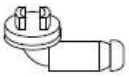	1	-
Display Extension Cable		1	10m
Hot Water Tank Sensor		2	10m
Display		1	-
Screws		2	-
Wall-mounted panel	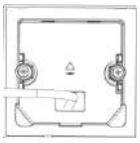	1	-
Anti-freeze Valve (option)		1	-
Refrigerant leakage detector(option)		1	-

4 About the unit

4.1 Identification

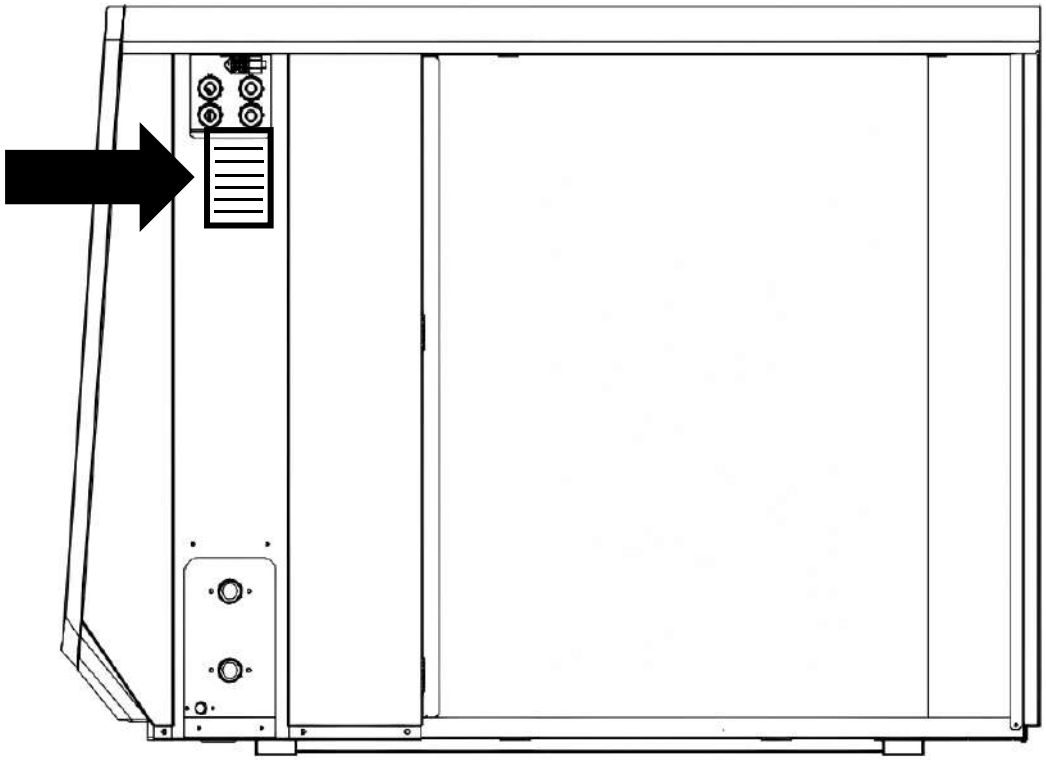

Example: iGXC11

Code	Explanation
iG	iGarden Brand
X	X-Series
C	With better cooling function
11	Rated capacity under standard operating conditions is 11 kW

4.2 Layout of key functional components

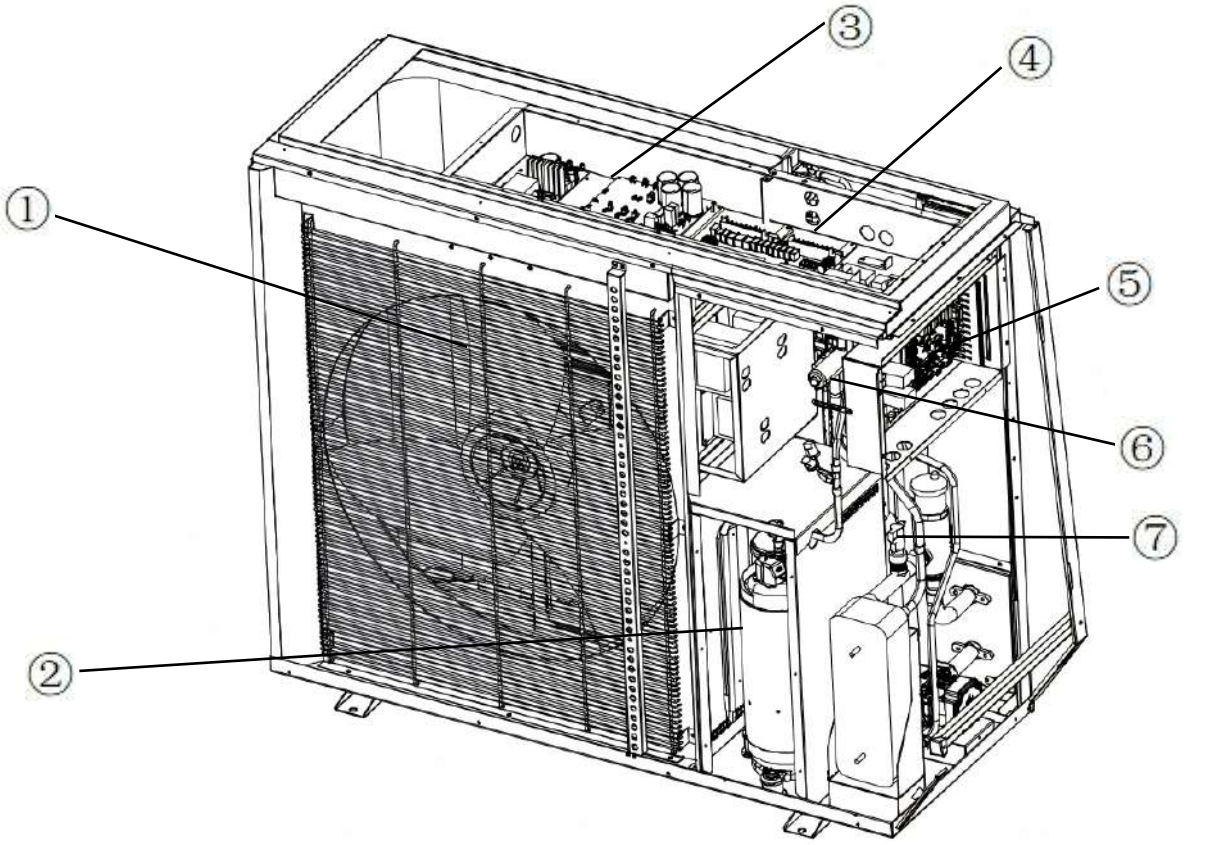

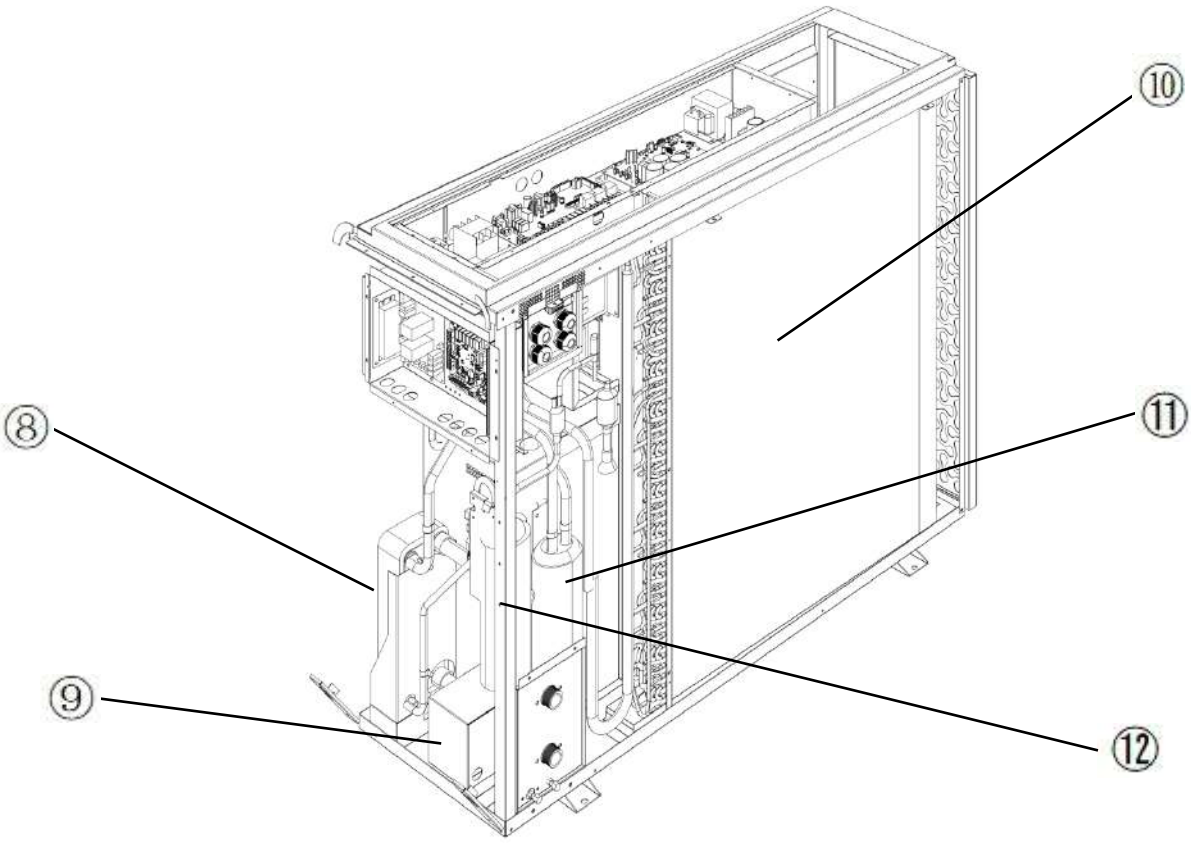

No.	Name	Explanation
①	Fan	Force airflow accelerates heat exchange between the heat exchanger and air in the heat pump system.
②	Compressor	Compress the refrigerant from low-temperature and low-pressure gas into high-temperature and high-pressure gas.
③	All-in-one inverter board	Drive the fan and compressor, and receives signals from sensors and switches.
④	Expansion board	Provide customers with the necessary loads for connection, such as three-way valves, external circulation pumps, and electric heaters, which automatically activate based on internal logic.
⑤	Main board	It receives data from temperature probes, water flow switches, level switches, etc., and then issues commands based on internal logic.
⑥	Four-way valve	It can alter the refrigerant's circulation path between the evaporator and condenser, enabling the transition between cooling and heating mode.
⑦	Water flow switch	When water flow is insufficient or interrupted, a signal is triggered to cut off power to critical components such as the compressor, ensuring safe system operation.
⑧	Plate heat exchanger	Used to realize heat exchange between refrigerant and water.
⑨	Water pump	Used to drive the circulation of water between the plate heat exchanger and the end load.
⑩	Fin heat exchanger	Used to realize heat exchange between refrigerant and air.
⑪	Refrigerant storage tank	It serves as the refrigerant storage and gas-liquid separation component, balancing refrigerant demand under different operating conditions while preventing liquid refrigerant from entering the compressor and causing liquid slugging, thereby ensuring system safety.
⑫	Gas separator	When there is an emergency involving R290 refrigerant leaking into water, it can separate the R290 refrigerant from the water and discharge it outdoors, preventing the R290 refrigerant from accumulating indoors.

4.3 Heating&Cooling Operation range

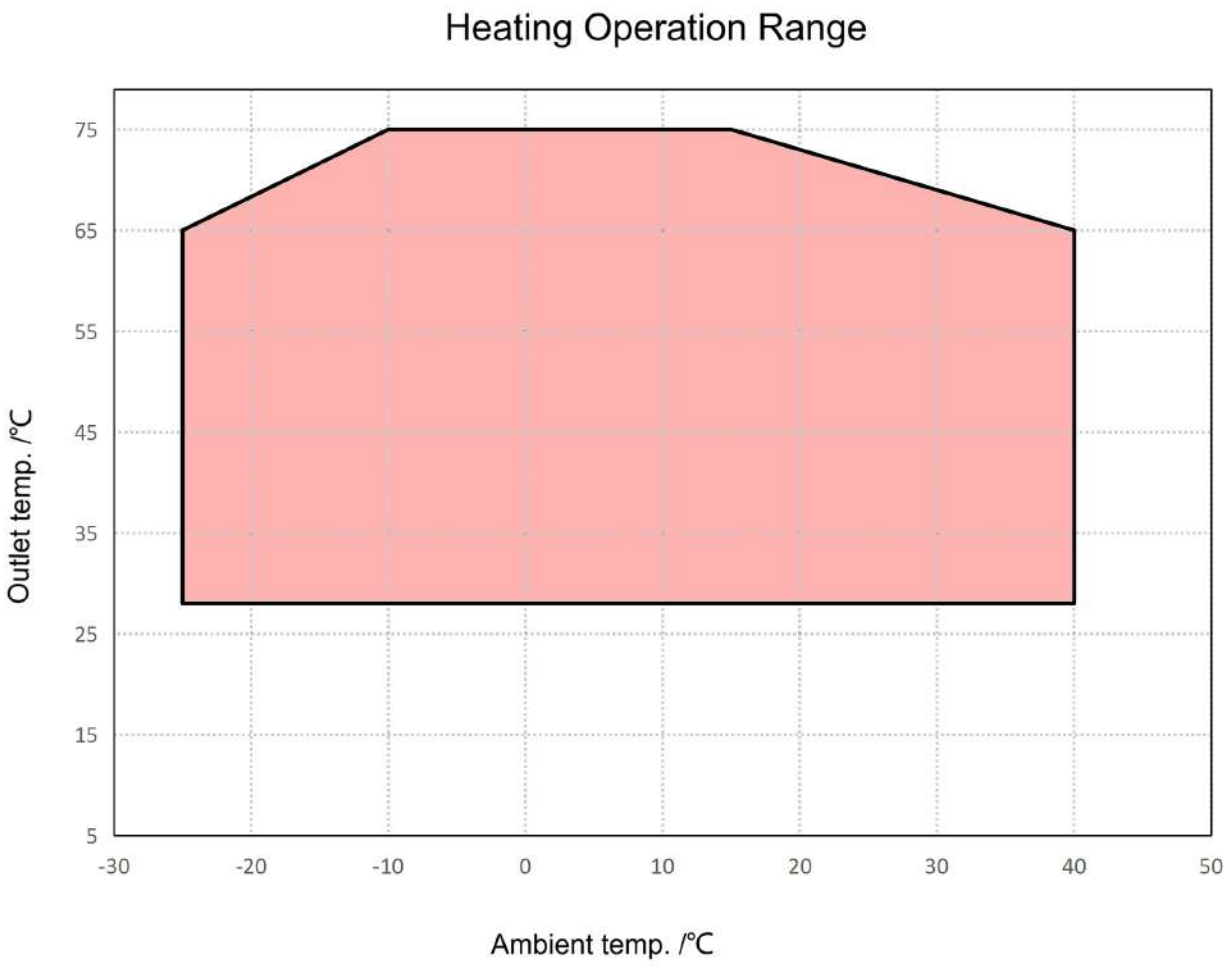

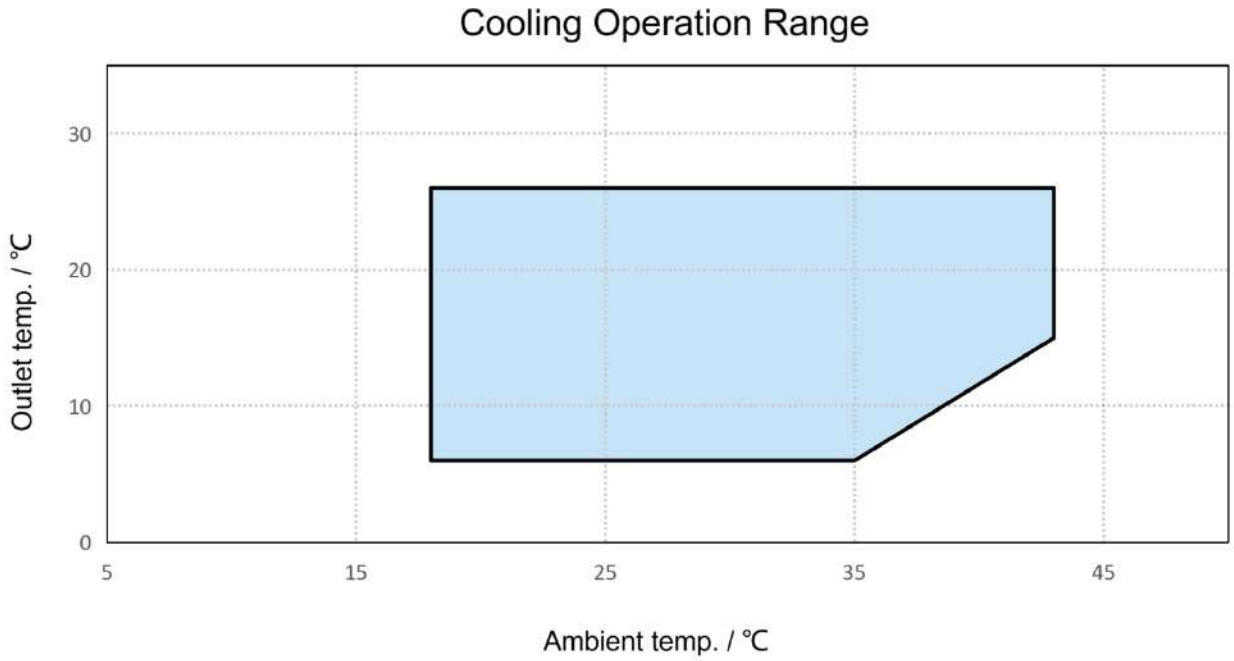

4.4 The data sheet of unit

Specifications-Air source heat pump-Fairland brand M+									
Air to Water Heat Pump	Model		iGXC08	iGXC11	iGXC13	iGXC16	iGXC11T	iGXC13T	iGXC16T
Power Supply			220-240V~/50Hz				380-415V/3N~/50Hz		
A7°C/W35°C	Normal capacity	kW	**8.00**	**11.00**	**13.00**	**16.00**	**11.00**	**13.00**	**16.00**
	Heating capacity	kW	4.05~9.50	3.75~13.45	4.05~15.15	6.39~18.1	3.77~13.46	4.05~15.15	6.41~18.2
	Power Input	kW	0.80~2.08	0.57~3.77	0.66~4.10	1.01~5.25	0.55~3.74	0.66~4.00	1.06~5.28
	COP range	W/W	4.13~7.00	4.11~7.00	4.09~6.57	4.01~6.32	4.13~6.95	4.09~6.58	4.05~6.36
A2°C/W35°C	Normal capacity	kW	**7.00**	**10.50**	**12.50**	**15.60**	**10.50**	**12.50**	**15.60**
	Heating capacity	kW	3.45~8.00	3.45~13.30	3.55~14.55	5.57~16.31	3.44~13.21	3.55~14.55	5.55~16.33
	Power Input	kW	0.82~2.30	0.69~3.74	0.87~3.95	1.20~4.75	0.67~3.79	0.87~3.93	1.15~4.8
	COP range	W/W	2.33~4.75	2.26~4.67	2.50~4.56	2.41~4.48	2.25~4.66	2.50~4.59	2.45~4.51
A7°C/W55°C	Normal capacity	kW	**7.00**	**10.60**	**12.70**	**15.80**	**10.50**	**12.70**	**15.80**
	Heating capacity	kW	3.60~8.40	3.32~13.06	3.92~14.60	5.30~16.2	3.33~13.08	3.92~14.60	5.32~16.3
	Power Input	kW	1.20~2.70	0.75~4.05	0.76~4.65	1.11~6.15	0.76~4.08	0.96~4.64	1.13~6.20
	COP range	W/W	2.25~4.15	2.15~4.03	2.04~4.01	2.02~3.97	2.15~4.02	2.04~4.04	2.06~4.00
A35°C/W18 °C	Normal capacity	kW	**7.00**	**10.00**	**12.00**	**15.00**	**10.00**	**12.00**	**15.00**
	Cooling capacity range	kW	1.89~9.15	2.74~12.55	3.63~13.76	4.94~17.62	2.73~12.50	3.63~13.79	4.93~17.65
	Power consumption range	kW	0.47~2.89	0.84~3.56	0.77~3.88	1.13~5.29	0.81~3.57	0.77~3.85	1.10~5.25
	EER range	W/W	2.21~4.33	2.10~4.21	2.01~4.16	2.08~4.14	2.08~4.20	2.01~4.20	2.05~4.20
Energy Rating	Average climate, W35 °C	/	A+++						
	Average climate, W55 °C	/	A+++						
Electrical Data	Max input current	A	15.0	20.4	24.0	32.0	7.2	8.5	13.0
	Maximum power	kW	3.45	5.80	6.50	9.00	5.90	6.50	9.50
Noise	Sound pressure at 1m dB(A) (7℃/35℃)	dB(A)	44	44	45	47	44	45	47
	Sound pressure at 3m dB(A) (7℃/35℃)	dB(A)	30	30	32	35	30	32	35
	Sound power level	dB(A)	51	51	52	55	51	52	55
Water Setting Temperature Range	Cooling	°C	6~26						
	Heating	°C	28~75						
	DHW	°C	28~75						
Operating Air Temperature		°C	-25~43						
Flow rate		m³/h	1.38	1.80	2.20	2.80	1.80	2.20	2.80
Water Pipe In-out Spec.		Inch	G1"	G1"	G1"	G1"	G1"	G1"	G1"
Refrigerant Circuit	Refrigerant	/	R290						
	GWP	/	0.02						
	Refrigerant R-290	g	1000	1300	1400	1850	1300	1400	1850
	Compressor type	/	Twin rotary						
Unit Dimensions		mm	1350*520*780	1430*525*1096	1430*525*1096	1350*555*1450	1430*525*1096	1430*525*1096	1350*555*1450
Packing Dimensions		mm	1411*560*815	1485*555*1130	1485*555*1130	1411*560*1487	1485*555*1130	1485*555*1130	1411*560*1487
Net Weight		kg	122	160	170	194	176	182	210
Gross Weight		kg	147	179	189	214	195	201	230
CO2 Equivalent (tonnes)		t	0.00002	0.000026	0.000028	0.000037	0.000026	0.000028	0.000037

5 Application guidelines

5.1 Capacity and load curve

Match the load with appropriate capacity of the unit based on the curve below.

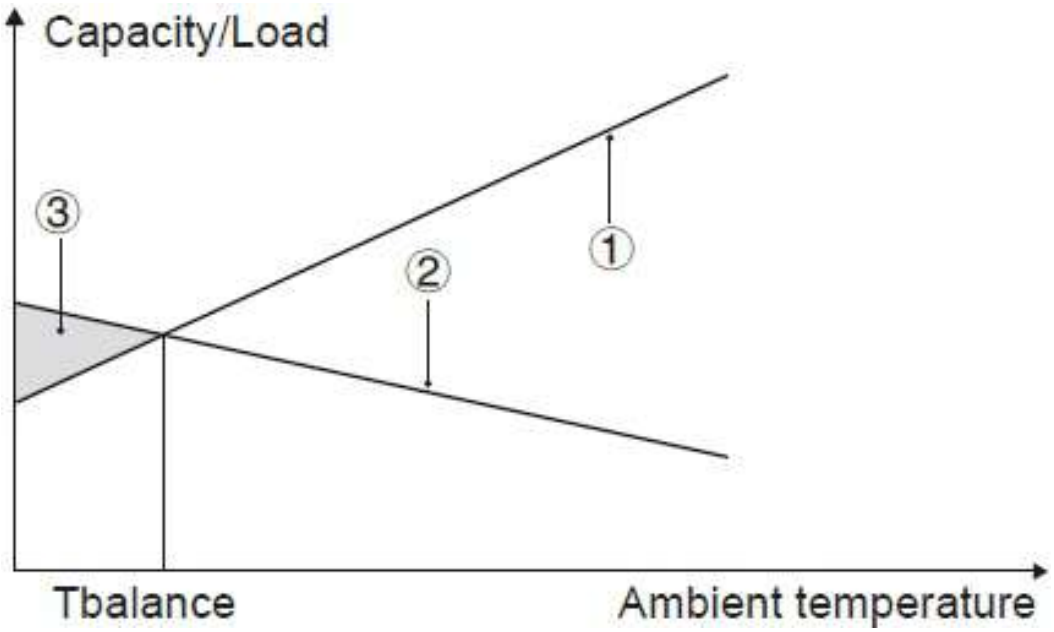

①Heat pump capacity

②Required heating capacity (site-dependent)

③Additional heating capacity provided by backup heaters

For further details, consult with your supplier.

5.2 DHW tank (field supply)

A domestic hot water (DHW) tank (with or without a booster heater) can be connected to the unit; it is typically heated via an internal coil, so the selection of internal coil specifications directly impacts the unit's heating performance and operational reliability.

The material specifications for the internal coil in the tank are shown in the following table:

Material	SUS 316L	20# steel + surface enameling

Based on experience, the heat exchange rate per unit area for smooth tubes is 3 kW, while for corrugated tubes it is 6 kW.

$$S = \frac{Q}{q}$$

In the formula:

S – External surface area of the internal coil, unit: m²

Q – Rated heating capacity of the unit, unit: kW

q – Heat exchange rate per unit area, unit: kW/m²

Calculation of coil length

$$L = \frac{S}{\pi \times d}$$

In the formula:

S – External surface area of the internal coil, unit: m²

π – Pi (take 3.14)

d – Diameter of the coil, unit: m

Calculate the appropriate pipe length for selecting the tank coil using the above formula.

Note: If corrugated internal coils are used, the resistance loss in the water system increases. Please adjust the water pump head accordingly.

Model		8-10kW	12-16kW
Tank volume/L	Recommended	150~300	200~500
Heat exchange area/m² (stainless steel coil)	Minimum	1.4	1.6
Heat exchange area/m² (enamel coil)	Minimum	2.0	2.5

(Tips: Selection shall be based on actual DHW demand. The above selection recommendations are only for the usage needs of a family of three, the above calculation formula is for reference only.)

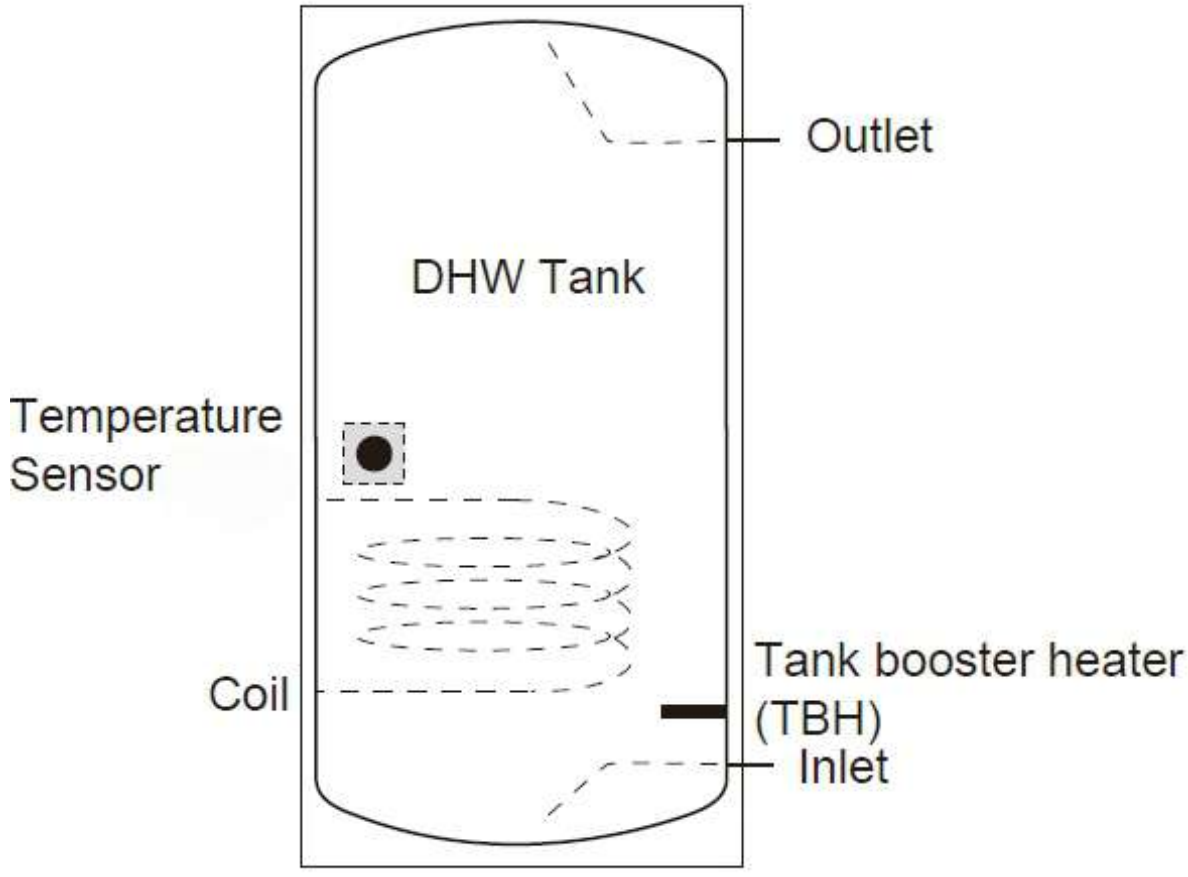

The booster heater should be installed below the temperature probe .

The heat exchanger (coil) should be installed below the temperature probe.

5.3 Buffer tank (field supply)

Installing a balance tank in the system can effectively reduce the unit's startup frequency, achieve efficient defrosting, and mitigate fluctuations in room temperature.

Heat Demand Calculation Formula for Defrosting:

$$Q_d = P_d \times \mathrm{t}_d$$

In the formula:

Q_d :Total heat demand during defrosting, in kJ.

P_d :Defrosting power, in kW (typically 20%-30% of the heat pump's heating power).

t_d :Defrosting time, in hours (h) (usually 5-10 minutes, i.e., 0.083-0.167 h).

Example:If the heat pump's heating capacity $Q_h = 10kW$,the defrosting power is 25%, and the defrosting time $t_d = 0.1h$, then:

$$Q_d = 0.25 \cdot 10 \cdot 0.1 = 0.25\mathrm{kWh} = 900kJ$$

During the defrosting process, the heat pump stops heating and absorbs heat from the system for defrosting. At this time, the buffer tank must provide sufficient heat to ensure that the water temperature does not drop by more than 3°C.

Buffer Tank Capacity Calculation Formula:

$$V = \frac{Q_d}{\rho \cdot c \cdot \Delta T}$$

V :Buffer tank capacity, in liters (L).

Q_d :Total heat demand during defrosting, in kJ.

ρ :Density of water, taken as 1kg/L.

c :Specific heat capacity of water, taken as .

ΔT :Allowable temperature drop of water, in °C (as required, ΔT =3 ℃)

Example:If Q_d =900kJ and ΔT =3 ℃, then:

$$V = \frac{900}{1 \cdot 4.18 \cdot 3} = \frac{900}{12.54} \approx 71.8L$$

When defrosting, in addition to the heat provided by the buffer tank, the system itself (e.g., pipes, terminal equipment, etc.) also has some thermal inertia, which can provide part of the heat. Therefore, the capacity of the buffer tank can be appropriately reduced.

Revised Formula:

$$V_{actual} = V \cdot (1 - \eta)$$

V_{actual} :Actual required buffer tank capacity.

η :Thermal inertia coefficient of the system, typically taken as 0.1-0.3 (i.e., the system can provide 10%-30% of the heat).

Example: If $V = 71.8L$ and $\eta = 0.2$,then:

$$V_{\text{actual}} = 71.8 \cdot (1 - 0.2) = 57.4L$$

Based on the calculation results, select a buffer tank with a standard capacity. For example, if the calculated required capacity is 57.4 L, a 60 L or 80 L standard model can be selected.

No.	Model	Tank volume/L
1	8-10kW	≥25
2	12-16kW	≥40
3	Cascade system	≥40*n
n: Quantity of outdoor units		

(Tips: The above calculation is for reference only.)

5.4 Expansion tank(field supply)

NOTICE
1. It is recommended to install an expansion tank on the tap water side.
2. Check that the total water volume in the system, excluding the internal water volume of the unit, is at least 40 L.

$$V = \frac{C \times e}{1 - \frac{P1 + 1}{P2 + 1}}$$

In the formula: V = volume of the expansion tank, unit: L

C = total water volume of the system (including boiler, pipes)

e = thermal expansion coefficient of water (see table below)

P1 = pre-charge pressure of the expansion tank (unit: bar)

P2 = maximum operating pressure of the system (unit: bar)

Thermal Expansion Coefficient of Water			
Water Temperature	Expansion Coefficient	Water Temperature	Expansion Coefficient
0	0.00013	55	0.01447
10	0.00025	60	0.01704
15	0.00085	65	0.01979
20	0.00180	70	0.02269
25	0.00289	75	0.02575
30	0.00425	80	0.02898
35	0.00582	85	0.03236
40	0.00782	90	0.03590
45	0.00984	95	0.03958
50	0.01207	100	0.04342

Installation notes:

1. In a heating system, the expansion tank is typically installed on the return water side (where the water temperature is relatively lower) or at the cold water inlet of the hot water storage tank.
2. Generally, expansion tanks of 35L (or 24L) and smaller can be directly connected to the system piping. Those of 35L (or 24L) and larger usually come with a triangular support to avoid placing excessive load on the system piping due to the tank's weight during operation. Use metal hoses to connect the expansion tank to the system's reserved interface. It is strictly prohibited to use rigid plastic pipes for this connection—if there is vibration in the piping, the joint between rigid plastic pipes and the expansion tank interface may leak water or even crack. Secure the expansion tank's base with anchor bolts to ensure stability during use.
3. A safety valve must be installed near the expansion tank to prevent damage to the expansion tank and other system components in the event of abnormal system pressure.
4. In closed-loop heating systems, the expansion tank must not be installed at the water pump's outlet, as this could cause cavitation in the pump.
5. In thermal systems such as air conditioning, boilers, and heat pumps, the expansion tank is typically installed on the system's return water side.
6. Before replacing the expansion tank, first shut down the system or isolate the expansion tank from the system to prevent leakage of system media through the expansion tank interface. The replacement tank should ideally match the original in terms of volume, temperature resistance, and pressure resistance.

Application notes:

1. The expansion tank is factory-precharged with pressure. Generally, for tanks of 150L or less, the pre-charge pressure is 1.5 bar; for those over 150L, it is 2 bar. If this pressure is unsuitable, adjustments can be made under the supplier's guidance.
2. When testing the expansion tank's air bladder, it is recommended to use water pressure directly. Never touch the air bladder with sharp objects.
3. If the expansion tank is to be used in special circumstances, inform the supplier to ensure appropriate membranes are provided.
4. The working medium for expansion tanks is typically water or a mixture of water and antifreeze (with the water proportion not less than 50%).
5. The expansion tank's pre-charge pressure must be checked regularly. If a pressure drop is detected, it should be replenished promptly to avoid affecting normal operation.
6. The working temperature and maximum working pressure are indicated on the expansion tank's label. Exceeding these ranges is strictly prohibited.
7. The volume of the expansion tank must be strictly calculated using the specified formula. An undersized tank will cause frequent activation of the safety valve and frequent water replenishment by the automatic water replenishment valve.
8. The maximum working pressure of the expansion tank corresponds to the pre-charge pressure marked on its body. If the pre-charge pressure needs to be adjusted for use, the maximum working pressure will change accordingly, following this general rule: a decrease in pre-charge pressure will result in a decrease in maximum working pressure (the specific reduction requires calculation); an increase in pre-charge pressure will leave the maximum working pressure unchanged.
9. Check the expansion tank's pre-charge pressure every 6 months (or annually). If insufficient air pressure is found, replenish it promptly.

(Tips: The above calculation is for reference only.)

5.5 Hydraulic performance curve

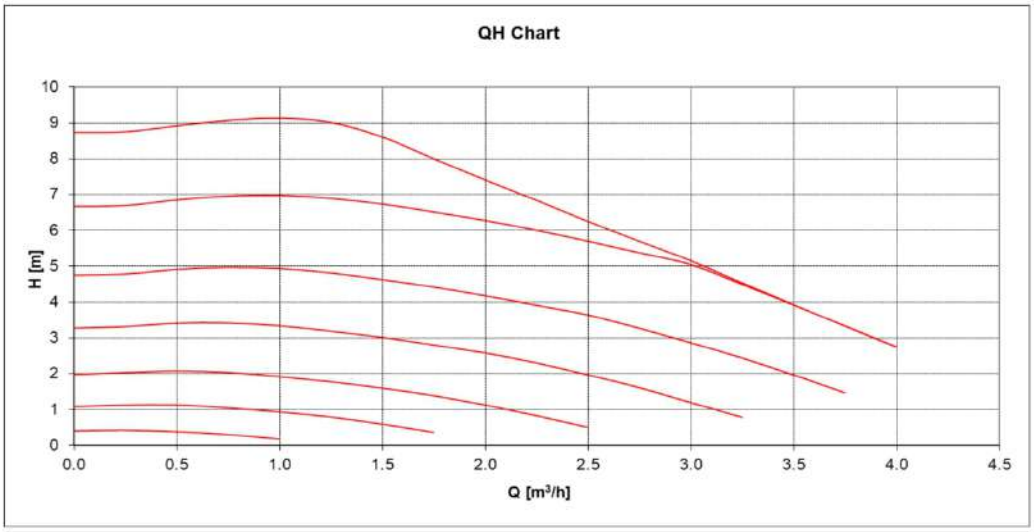

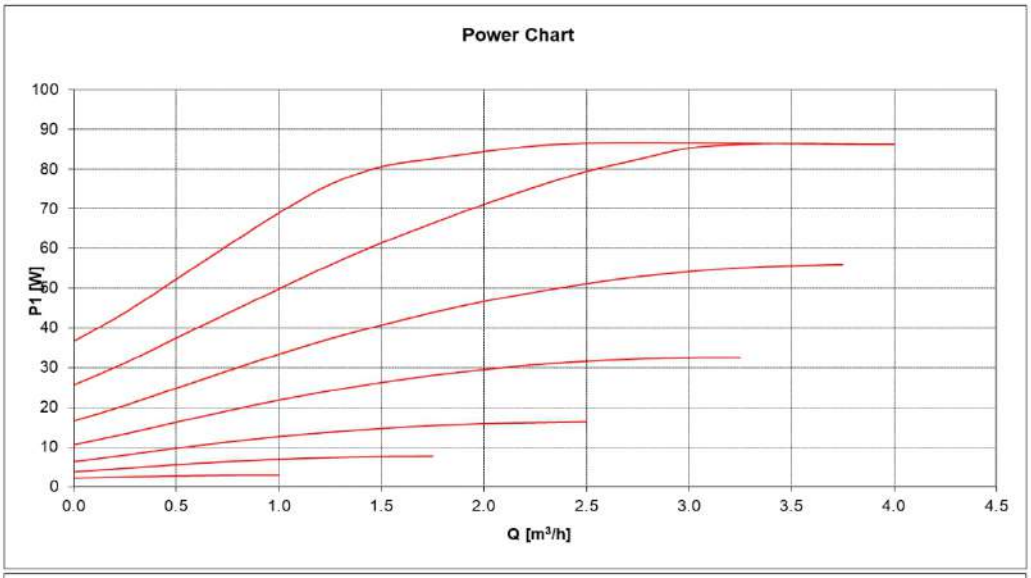

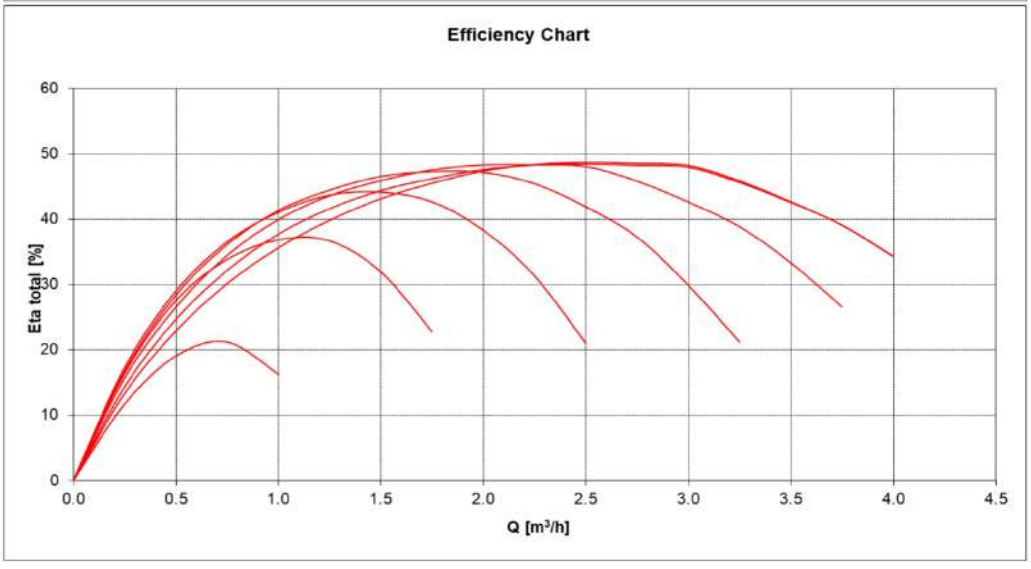

The performance of a PWM controlled pump is measured on 8 PWM values, namely: 5% (max), 20%, 31%, 41%,52%,62%, 73%, and 88% (min), under heating conditions.

This is done in accordance with ISO 9906, under system conditions of 2.0 bar, and a water temperature of 20°C.

5.6 Filter(field supply)

A water filter must be installed at the water inlet of the heat pump unit. This prevents impurities from entering the unit from the piping, thereby protecting its normal operation.

Basic requirements: The water filter is generally made of brass or stainless steel. If stainless steel is selected for the filter, it is suitable for water-based media containing ethylene glycol (at concentrations below 30%).

Filter Standards				
Connection Diameter	1"F	1 1/4"F	1 1/2"F	2"F
Filter Mesh Count	40	40	40	40

Selection recommendations:

The filter is used to collect impurities in the system, preventing them from interfering with the system's normal operation. A larger mesh size allows the filter to trap smaller impurities, while a smaller mesh size is designed to capture larger impurities. The filter size should be the same as or one size larger than the outer diameter of the system's main water supply pipe.

Installation recommendations:

1. The filter must be installed in a proper position. The direction of water flow inside the valve stem must align with the arrow direction marked on the filter. For filters equipped with a drain valve, the drain valve must face downward. Incorrect installation may prevent impurities from being discharged from the filter. Over time, the accumulation of these impurities inside the unit will reduce the filter's effectiveness, increase resistance, decrease water flow in the system, and thus impair the unit's heat exchange efficiency.
2. Ensure there are sufficient straight pipe sections before and after the Y-strainer to guarantee the filtering effect.
3. To facilitate maintenance and cleaning of impurities in the filter, it is recommended to install a globe valve both upstream and downstream of the filter.

The effect of different mesh counts on water resistance:

The higher the mesh count of a Y-strainer's screen, the higher its filtration precision, and the greater its inherent water resistance.

Methods for cleaning the filter and determining cleaning intervals:

1. The Y-strainer screen should be cleaned once every 3 months. This prevents the buildup of filtered impurities on the screen, which could increase fluid resistance and disrupt the system's normal circulation.
2. When cleaning, first close the inlet and outlet manual valves, then disassemble the filter and clean it thoroughly. After cleaning, open the inlet manual valve to flush out sediment in the pipeline, allowing water to discharge until the turbidity of the discharged water is close to that of the main pipeline water. After this, repeat the same steps to clean the section of the outlet manual valve.
3. After cleaning, carefully check for water leakage from the filter gasket. If leakage is found, replace the sealing gasket promptly.

(Tips: The above selection is for reference only.)

5.7 Safety valve(field supply)

The safety valve is usually installed on the return water side of systems such as air conditioning, boilers, and heat pumps.

Basic requirements: Safety valves are typically constructed from brass or stainless steel, and they are also suitable for media containing ethylene glycol (with a concentration below 30%).

Safety valve specifications	
Design Pressure (bar)	1.5/2.5/3

Selection recommendations:

The safety valve functions as a safety protection device in the system. When the system pressure exceeds the maximum limit, the safety valve opens to discharge part of the hot water from the system, ensuring the system pressure does not exceed this limit and thus keeping the system within the safe pressure range. The set pressure of the safety valve should match the maximum working pressure of the system. Typically, the parameters provided by the equipment supplier are adequate.

Installation position of the safety valve:

1. The safety valve should be installed at the highest point or the point of maximum pressure in the water pipeline to ensure smooth flow of the pipeline medium.
2. The safety valve must be installed vertically.
3. The safety valve should be installed in a location that is easy to inspect and adjust, with adequate operating space around it.
4. When the safety valve discharges fluid, it should be directed to an appropriate discharge location.

Maintenance measures for safety valves:

1. Cleaning: Regularly clean the interior and exterior of the safety valve, and remove deposits from the valve seat and piston to prevent impurities from impairing the valve's sealing performance.
2. Seal inspection: Regularly check the safety valve's sealing performance, particularly the sealing condition of the valve seat and piston. If damage or severe wear is detected, replace the components promptly.
3. Valve lubrication: Apply an appropriate amount of lubricant to the safety valve's opening and closing components as needed to ensure smooth operation.
4. Regular calibration: In accordance with regulations, regularly calibrate the safety valve and inspect its opening/closing pressure and seat sealing performance. If any issues are found to be substandard, adjust or replace the valve promptly.

Handling abnormal situations:

If abnormalities such as air leakage or valve sticking are detected during the safety valve's operation, promptly shut down the equipment for inspection, repair, or replacement of the safety valve.

(Tips: The above selection is for reference only.)

5.8 Secondary water pump(field supply)

Pump selection should satisfy the larger flow rate and head required by the system under both design heating conditions and summer cooling conditions.

If the head of the unit's built-in pump is insufficient to overcome the system resistance, a secondary pump should be added to supplement the head.

Hydraulic calculations must be performed using the water system circuit with the highest resistance. Based on the total pressure loss, and accounting for a safety margin, an appropriate circulation pump should be selected.

Water head calculation:

The hydraulic calculation formula for floor heating pipes is: $\triangle P = \triangle P_{\mathrm{m}} + \triangle P_j$

Frictional resistance loss: $\triangle P_{\mathrm{m}} = \mathrm{R} + \mathrm{l}$

Local resistance loss: $\triangle \mathbf{P_j} = \boldsymbol{\varepsilon} \frac{\rho \mathbf{v}^2}{2}$

The above can be calculated in detail using relevant parameters from the hydraulic calculation verification table.

Alternatively, the following formula can be used for estimation:

Head H = K x (height difference between pipes h (m) + unit water-side pressure loss + longest pipe length (m) x 0.07)

Note:

K is a safety factor of 1.1~1.2, take 1.1 for a single water system, and 1.2 for a multi-water system.

The water-side pressure loss unit is kPa, 10kPa = 1 m ($\mathrm{H_2O}$) head.

In the case of a unit with a built-in water pump, the head of the secondary water pump shall be calculated by subtracting the corresponding head of the unit's water pump.

Calculation of water pump flow:

Calculate based on 1.2 times the total system flow.

Tips: The water pump should be selected based on the actual engineering installation application, the above calculation is for reference only.

5.9 Typical applications

5.9.1 Controlled through the display

You can set the single-zone water temperature, single-zone room temperature, dual-zone water control and dual-zone water and room temperature control on the wired controller. Four options: 1 ZONE.TW, 1 ZONE TR, 2 ZONE.TW, 2 ZONE TW&TR (Advanced setting >> Parameters Config. >> System Parameters>> ZONE_CTRL).

① **Single-Zone Water Temperature Control**

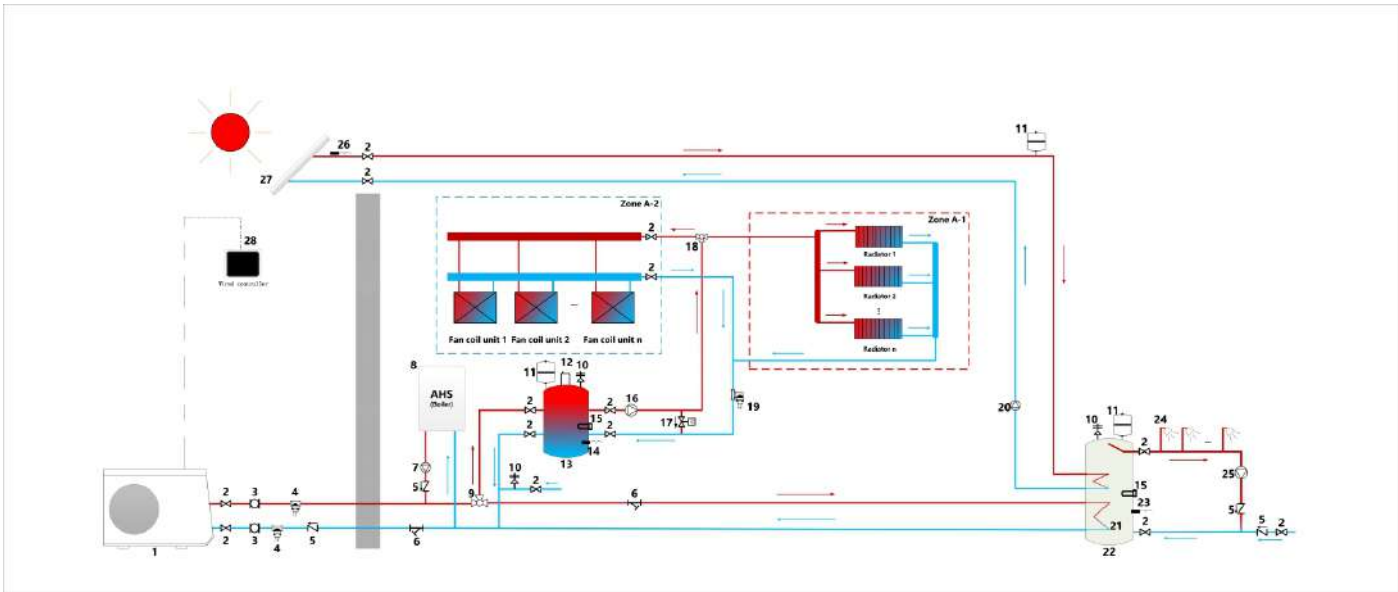

NO.	Item	NO.	Item
1	Heat pump	16	Water pump for Zone A(field supply)
2	Stop valve(field supply)	17	Bypass valve(field supply)
3	Flexible pipe(field supply)	18	Cooling three-way valve(field supply)
4	Antifreeze valve(Customized)	19	Magnetic filter(field supply)
5	Check valve(field supply)	20	Water pump for solar heater(field supply)
6	Y-filter(field supply)	21	heat exchange coil for hot water tank
7	Water pump for AHS(field supply)	22	Hot water tank(field supply)
8	AHS(Auxiliary Heating Source)(field supply)	23	Temp. sensor for hot water tank(accessory)
9	Hot water three way valve(field supply)	24	Domestic hot water, such as for bathrooms, etc.
10	Safety valve(field supply)	25	Return water pump(field supply)
11	Expansion tank(field supply)	26	Temp. sensor for solar heater(Customized)
12	Vent valve(field supply)	27	Solar heater(field supply)
13	Buffer tank(field supply)	28	Wired controller(accessory)
14	Temp. sensor for buffer tank(accessory)		
15	Electric heater for buffer tank(field supply)		
Note: The illustrations in the application guidelines are meant for reference only, and are NOT to be used as detailed hydraulic diagrams. The detailed hydraulic dimension and balancing are NOT shown, and are the responsibility of the installer			

Space heating/cooling

The Heating/Cooling mode ON/OFF, operation mode, and temperature are set on the display. PUMPo keeps running as long as space heating/cooling ON, and S3V1 remains OFF.

Domestic water heating

The ON/OFF control and target tank water temperature are set on the display. With buffer tank, PUMPo keeps running as long as space heating/cooling ON for domestic water heating and S3V1 remains ON.

AHS (auxiliary heat source) control

The AHS function is enabled on the display. (Admin Settings>>Maintenance Settings>>Parameters Configuration>> Energy Control)

- AHS ON Prerequisites

1) Set the systems total outlet water temperature probe (Twout3) to "Enable".
2) At least one of the following two conditions is satisfied:

a. Set the external heat source to "Only Heating" or "Heating & Hot Water" and activate the units heating mode.

b. Set the external heat source to "Only Hot Water" or "Heating & Hot Water" and activate the units DHW mode.

3) The water tank electric heater is turned off.

- Control logic

1) When the AHS is set to be valid only for heating mode, AHS can be turned on in the following ways:

a. Turn on the AHS via Force OPEN function on the display;

b. AHS will be turned on automatically if the water temperature is lower than target temperature and AHS close for a certain period at low ambient temperature.

PUMPo keeps running as long as the heating mode is ON.

2) The AHS is set to be valid for heating and DHW modes. In heating mode, AHS control is the same as item 1) listed above;

In DHW mode, AHS will be turned on automatically when the domestic water temperature THWt is lower than target temperature and AHS has closed for a certain period when domestic water temperature THWt is low .

With buffer tank, PUMPo keeps running as long as the heating mode is ON.

3) When the AHS is set to be valid, R, C port can set to be “Remote AHS” on the display(Advanced setting >> Parameters Config. >> System Parameters >> REMOTE_SW_TYPE). In heating mode or DHW mode, AHS will be turned on when the R,C dry contact closes.

TBH (tank booster heater) control

The TBH function is set on the display(Advanced setting >> Parameters Config. >> System Parameters >> TBH).

1) When the TBH is set to be valid, TBH can be turned on via FORCE OPEN function on the display;
2) In DHW mode, TBH will be turned on in the following ways:

a. When DHW PRIORITY is ON:

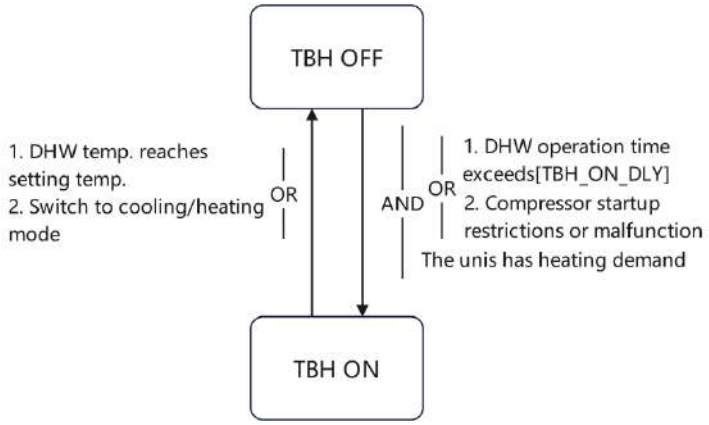

b. When DHW PRIORITY is OFF:

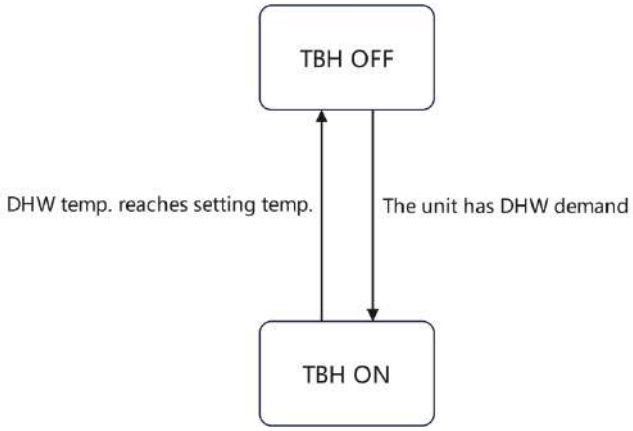

3) When the TBH is set to be valid, R, C port can set to be “Remote TBH” on the display(Advanced setting >> Parameters Config. >> System Parameters >> REMOTE_SW_TYPE). In heating mode or DHW mode, TBH will be turned on when the R,C dry contact closes.

Solar energy control

The unit recognizes solar energy signals by judging Tsl or receiving SL1SL2 signals from the display. The recognition method can be set on the user interface.

1) When Tsl is set to be valid(Advanced setting >> Parameters Config. >> System Parameters >> Input &Sensors), solar energy turns ON when Tsl is high enough, and P_s starts running; Solar energy turns OFF when Tsolar is low. and PUMPsl stops running.

2) When Tsl is set to be invalid and SL1 SL2 control is set to be valid(Advanced setting >> Parameters Config. >> System Parameters >> SOLAR), solar energy turns ON after receiving solar signals from the display, and PUMPsl starts running; If no solar signals are received, solar energy turns OFF, and PUMPsl stops running.

② **Dual-Zone Water Temperature Control**

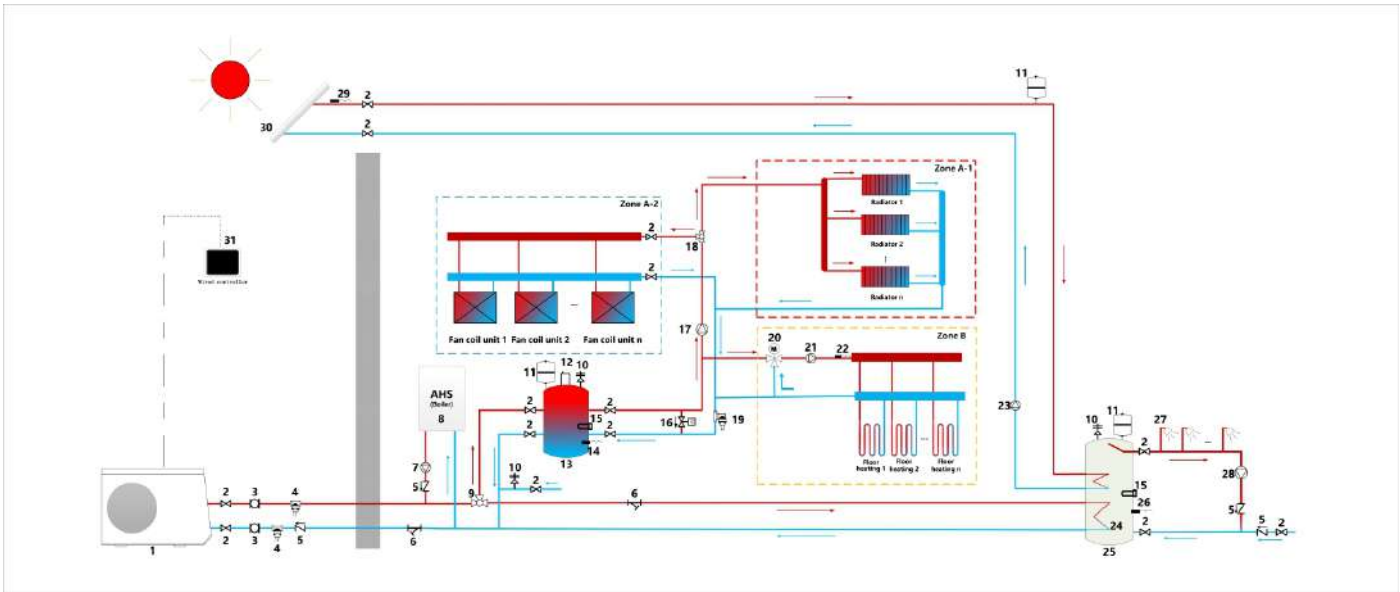

NO.	Item	NO.	Item
1	Heat pump	17	Bypass valve(field supply)
2	Stop valve(field supply)	18	Cooling three-way valve(field supply)
3	flexible pipe(field supply)	19	Magnetic filter(field supply)
4	Antifreeze valve(Customized)	20	Mixing three way valve(field supply)
5	Check valve(field supply)	21	Zone B Floor Heating Pump(field supply)
6	Y-type filter(field supply)	22	Floor Heating Inlet Water Temp. Sensor(Customized)
7	AHS water pump(field supply)	23	Water pump for solar heater(field supply)
8	Auxiliary Heat Source (AHS)(field supply)	24	heat exchange coil for hot water tank
9	Hot Water Three-way Valve(field supply)	25	Hot water tank(field supply)
10	Safety valve(field supply)	26	Temp. sensor for hot water tank(accessory)
11	Expansion tank(field supply)	27	Domestic hot water, such as for bathrooms, etc.
12	Vent valve(field supply)	28	Return water pump(field supply)
13	Buffer tank(field supply)	29	Temp. sensor for solar heater(Customized)
14	Temp. sensor for buffer tank(accessory)	30	Solar heater(accessory)
15	Electric heater for buffer tank(field supply)	31	Wired controller(accessory)
16	Water pump for Zone A(field supply)		
Note: The illustrations in the application guidelines are meant for reference only, and are NOT to be used as detailed hydraulic diagrams. The detailed hydraulic dimension and balancing are NOT shown, and are the responsibility of the installer			

Space heating/cooling

The Heating/Cooling mode ON/OFF, operation mode, and temperature are set on the display. The compressor is controlled by water temperature. Zone A can operate in cooling mode or heating mode, while Zone B can only operate in heating mode; During operation, Zone A is controlled by Water flow temperature (Twout, Twin, Tact), Zone B is controlled by Zone B water outlet temperature(TFLin).

External pump operation

When Zone A turns ON, PUMPo starts running; When Zone A turns OFF, PUMPo stops running.

When Zone B turns ON, S3V3 switches between ON and OFF(For three-way valve) or adjust the opening(For mixing valve) according to the set TFLin, and PUMPmix remains ON; When Zone B turns OFF, S3V3 remains OFF and PUMPmix stops running.

The domestic water tank, AHS (auxiliary heat source), TBH (water tank electric auxiliary heat), and solar control can be connected.The control method is the same as what is described in the above section.

③ Single-Zone Room Temperature Control

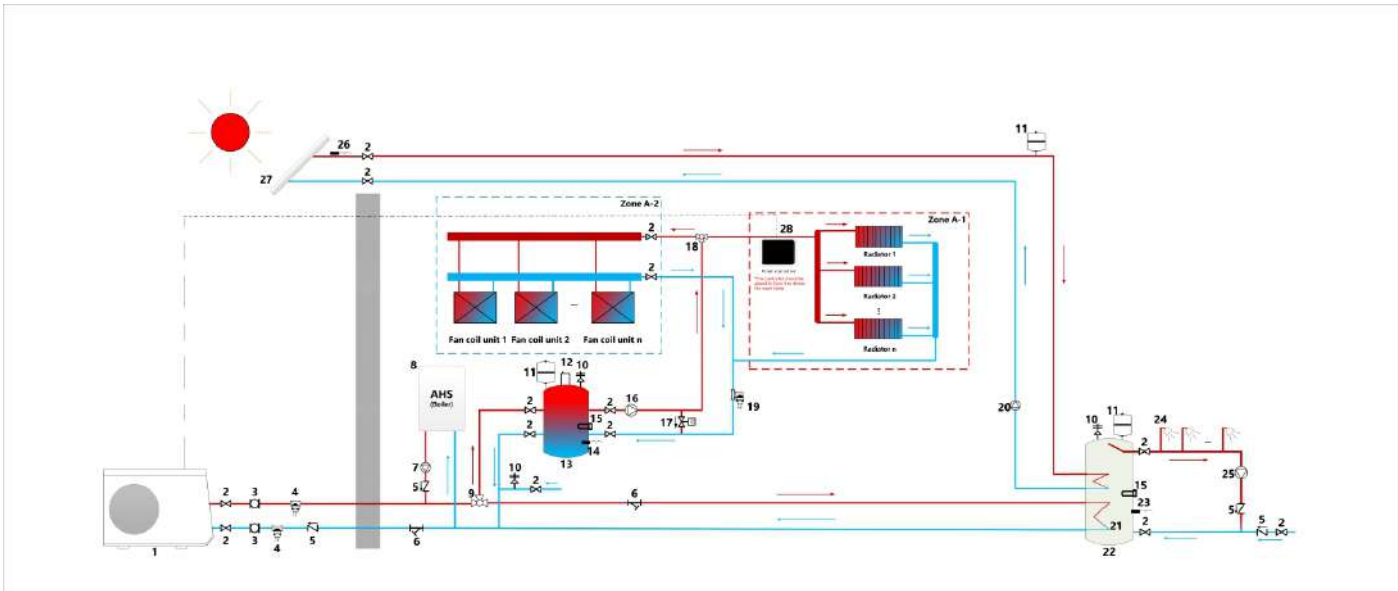

NO.	Item	NO.	Item
1	Heat pump	16	Water pump for Zone A(field supply)
2	Stop valve(field supply)	17	Bypass valve(field supply)
3	Flexible pipe(field supply)	18	Cooling three-way valve(field supply)
4	Antifreeze valve(Customized)	19	Magnetic filter(field supply)
5	Check valve(field supply)	20	Water pump for solar heater(field supply)
6	Y-filter(field supply)	21	heat exchange coil for hot water tank
7	Water pump for AHS(field supply)	22	Hot water tank(field supply)
8	AHS(Auxiliary Heating Source)(field supply)	23	Temp. sensor for hot water tank(accessory)
9	Hot water three way valve(field supply)	24	Domestic hot water, such as for bathrooms, etc.
10	Safety valve(field supply)	25	Return water pump(field supply)
11	Expansion tank(field supply)	26	Temp. sensor for solar heater(Customized)
12	Vent valve(field supply)	27	Solar heater(field supply)
13	Buffer tank(field supply)	28	Wired controller(accessory)
14	Temp. sensor for buffer tank(accessory)		
15	Electric heater for buffer tank(field supply)		
Note: The illustrations in the application guidelines are meant for reference only, and are NOT to be used as detailed hydraulic diagrams. The detailed hydraulic dimension and balancing are NOT shown, and are the responsibility of the installer			

Space heating/cooling

The Heating/Cooling mode ON/OFF, operation mode, and temperature are set on the display. The compressor is controlled by room temperature. The initial water temperature is set on display. During operation it's adjusted automatically by room temperature. PUMPo keeps running as long as space heating/cooling ON, and S3V1 remains OFF.

External pump operation

When Zone A turns ON, PUMPo starts running. When Zone A turns OFF, PUMPo stops.

The domestic water tank, AHS (auxiliary heat source), TBH (water tank electric auxiliary heat), and solar control can be connected.The control method is the same as what is described in the above section.

④ Dual-Zone Water and Room Temperature Control

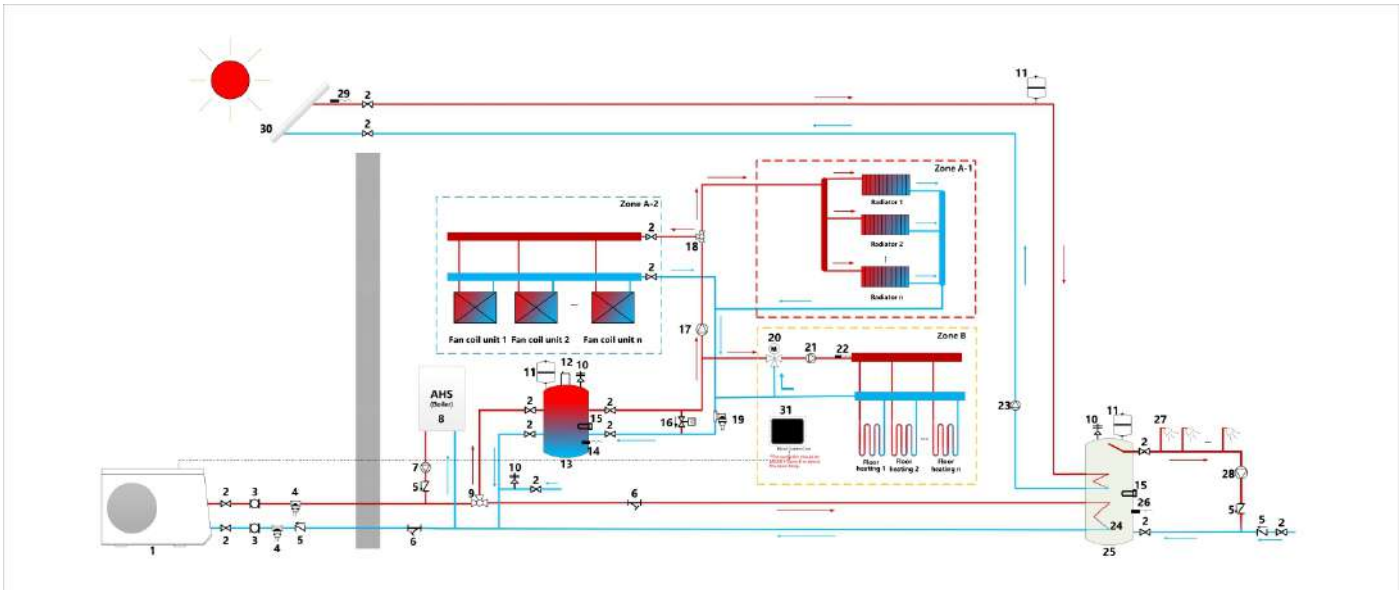

NO.	Item	NO.	Item
1	Heat pump	17	Bypass valve(field supply)
2	Stop valve(field supply)	18	Cooling three-way valve(field supply)
3	flexible pipe(field supply)	19	Magnetic filter(field supply)
4	Antifreeze valve(Customized)	20	Mixing three way valve(field supply)
5	Check valve(field supply)	21	Zone B Floor Heating Pump(field supply)
6	Y-type filter(field supply)	22	Floor Heating Inlet Water Temp. Sensor(Customized)
7	AHS water pump(field supply)	23	Water pump for solar heater(field supply)
8	Auxiliary Heat Source (AHS)(field supply)	24	heat exchange coil for hot water tank
9	Hot Water Three-way Valve(field supply)	25	Hot water tank(field supply)
10	Safety valve(field supply)	26	Temp. sensor for hot water tank(accessory)
11	Expansion tank(field supply)	27	Domestic hot water, such as for bathrooms, etc.
12	Vent valve(field supply)	28	Return water pump(field supply)
13	Buffer tank(field supply)	29	Temp. sensor for solar heater(Customized)
14	Temp. sensor for buffer tank(accessory)	30	Solar heater(accessory)
15	Electric heater for buffer tank(field supply)	31	Wired controller(accessory)
16	Water pump for Zone A(field supply)		
Note: The illustrations in the application guidelines are meant for reference only, and are NOT to be used as detailed hydraulic diagrams. The detailed hydraulic dimension and balancing are NOT shown, and are the responsibility of the installer			

Space heating/cooling

The Heating/Cooling mode ON/OFF, operation mode, water temperature and Zone B room temperature are set on the display. Zone A can operate in cooling mode or heating mode, while Zone B can only operate in heating mode; During operation, Zone A is controlled by Water flow temperature (Twout, Twin, Tact), Zone B is controlled by room temperature.

External pump operation

When Zone A turns ON, PUMPo starts running; When Zone A turns OFF, PUMPo stops running;

When Zone B turns ON, S3V3 switches between ON and OFF(For three-way valve) or adjust the opening(For mixing valve) according to the set TFLin, and PUMPmix remains ON; When Zone B reaches the setting room temperature, S3V3 remains OFF while PUMPmix keeps running.

The domestic water tank, AHS (auxiliary heat source), TBH (water tank electric auxiliary heat), and solar control can be connected.The control method is the same as what is described in the above section.

5.9.2 Controlled through the display and room thermostat

① Single-Zone Room Thermostat ON/OFF Control

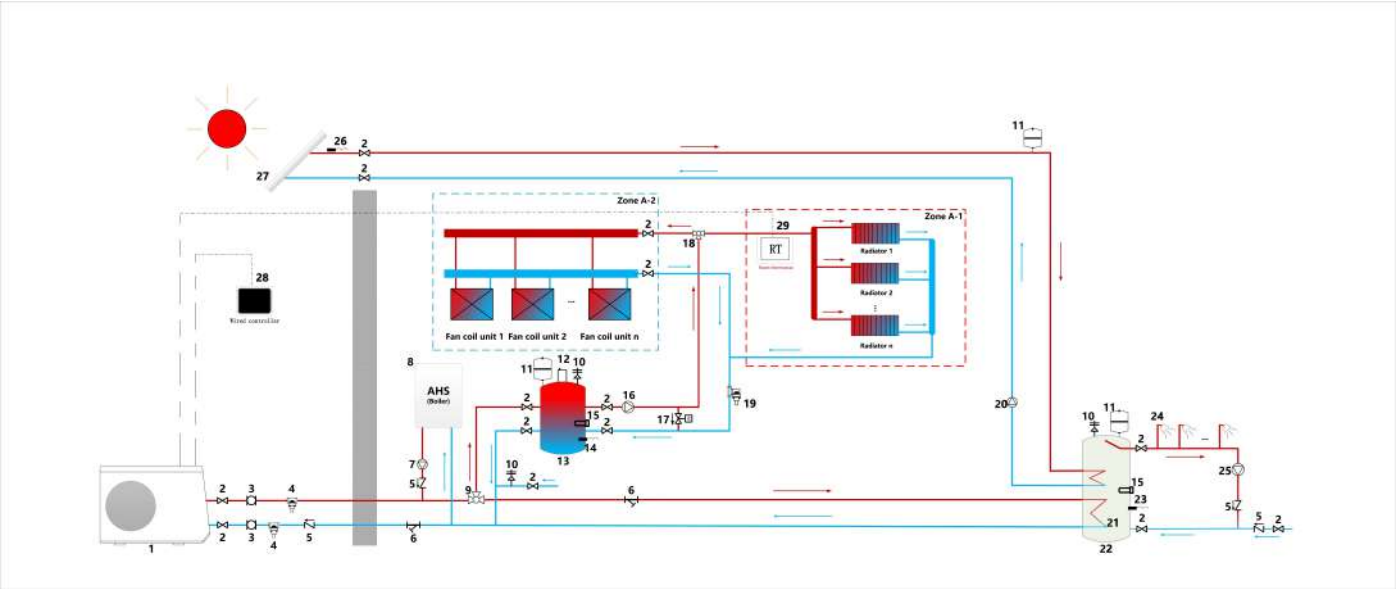

NO.	Item	NO.	Item
1	Heat pump	16	Water pump for Zone A(field supply)
2	Stop valve(field supply)	17	Bypass valve(field supply)
3	Flexible pipe(field supply)	18	Cooling three-way valve(field supply)
4	Antifreeze valve(Customized)	19	Magnetic filter(field supply)
5	Check valve(field supply)	20	Water pump for solar heater(field supply)
6	Y-filter(field supply)	21	heat exchange coil for hot water tank
7	Water pump for AHS(field supply)	22	Hot water tank(field supply)
8	AHS(Auxiliary Heating Source)(field supply)	23	Temp. sensor for hot water tank(accessory)
9	Hot water three way valve(field supply)	24	Domestic hot water, such as for bathrooms, etc.
10	Safety valve(field supply)	25	Return water pump(field supply)
11	Expansion tank(field supply)	26	Temp. sensor for solar heater(Customized)
12	Vent valve(field supply)	27	Solar heater(field supply)
13	Buffer tank(field supply)	28	Wired controller(accessory)
14	Temp. sensor for buffer tank(accessory)	29	Room thermostat(accessory)
15	Electric heater for buffer tank(field supply)		

Note: The illustrations in the application guidelines are meant for reference only, and are NOT to be used as detailed hydraulic diagrams. The detailed hydraulic dimension and balancing are NOT shown, and are the responsibility of the installer

Space heating/cooling

The operation mode, and water temperature are set on the display. The Heating/Cooling mode ON/OFF is controlled by room temperature. PUMPo keeps running as long as space heating/cooling ON, and S3V1 remains OFF.

External pump operation

When Zone A turns ON by thermostat, PUMPo starts running. When Zone A turns OFF by thermostat, PUMPo stops.

The domestic water tank, AHS (auxiliary heat source), TBH (water tank electric auxiliary heat), and solar control can be connected.The control method is the same as what is described in the above section.

② Single-Zone Room Thermostat Mode switch Control

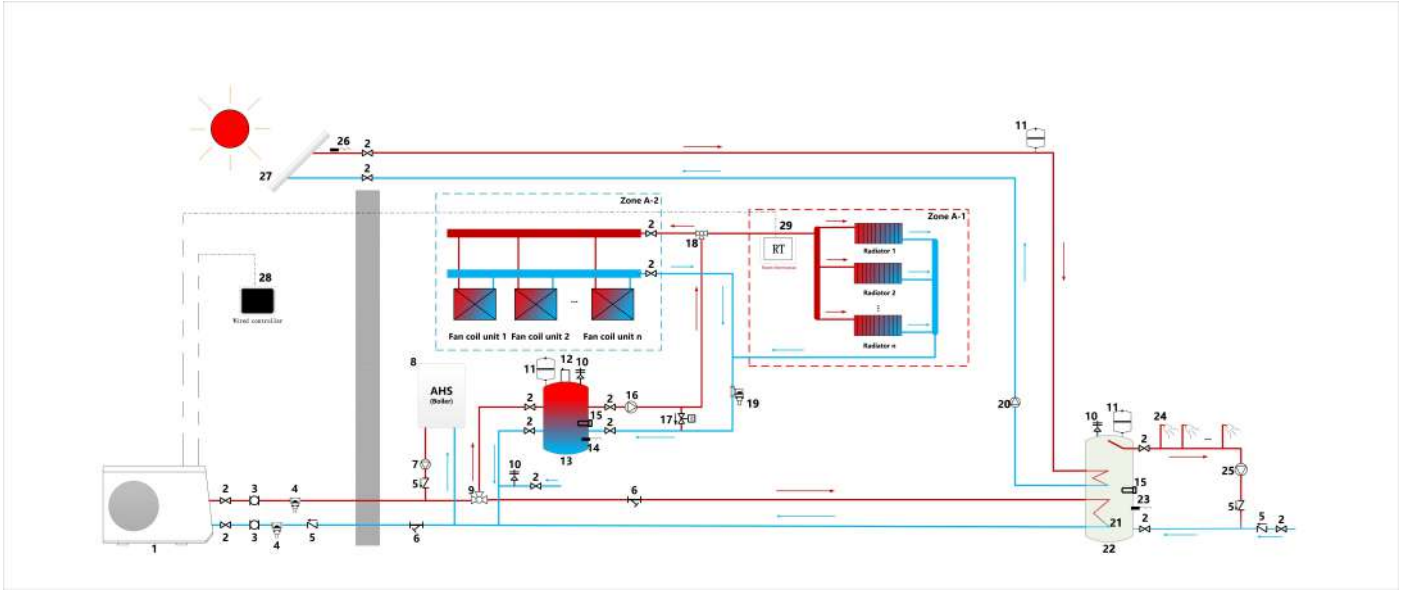

NO.	Item	NO.	Item
1	Heat pump	16	Water pump for Zone A(field supply)
2	Stop valve(field supply)	17	Bypass valve(field supply)
3	Flexible pipe(field supply)	18	Cooling three-way valve(field supply)
4	Antifreeze valve(Customized)	19	Magnetic filter(field supply)
5	Check valve(field supply)	20	Water pump for solar heater(field supply)
6	Y-filter(field supply)	21	heat exchange coil for hot water tank
7	Water pump for AHS(field supply)	22	Hot water tank(field supply)
8	AHS(Auxiliary Heating Source)(field supply)	23	Temp. sensor for hot water tank(accessory)
9	Hot water three way valve(field supply)	24	Domestic hot water, such as for bathrooms, etc.
10	Safety valve(field supply)	25	Return water pump(field supply)
11	Expansion tank(field supply)	26	Temp. sensor for solar heater(Customized)
12	Vent valve(field supply)	27	Solar heater(field supply)
13	Buffer tank(field supply)	28	Wired controller(accessory)
14	Temp. sensor for buffer tank(accessory)	29	Room thermostat(accessory)
15	Electric heater for buffer tank(field supply)		
Note: The illustrations in the application guidelines are meant for reference only, and are NOT to be used as detailed hydraulic diagrams. The detailed hydraulic dimension and balancing are NOT shown, and are the responsibility of the installer			

Space heating/cooling

The water temperature are set on the display. The Heating/Cooling mode ON/OFF and operation mode is controlled by room temperature. PUMPo keeps running as long as space heating/cooling ON, and S3V1 remains OFF.

External pump operation

When Zone A turns ON by thermostat, PUMPo starts running. When Zone A turns OFF by thermostat, PUMPo stops.

The domestic water tank, AHS (auxiliary heat source), TBH (water tank electric auxiliary heat), and solar control can be connected.The control method is the same as what is described in the above section.

④ Dual-Zone Room Thermostat ON/OFF Control

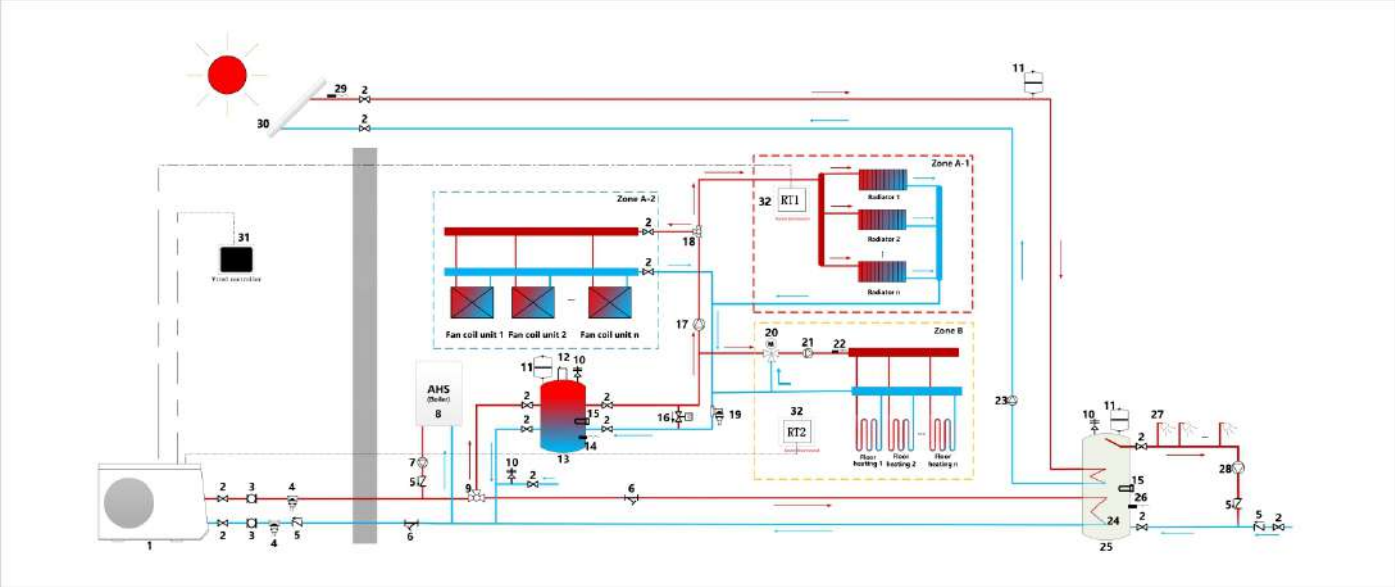

NO.	Item	NO.	Item
1	Heat pump	17	Bypass valve(field supply)
2	Stop valve(field supply)	18	Cooling three-way valve(field supply)
3	flexible pipe(field supply)	19	Magnetic filter(field supply)
4	Antifreeze valve(Customized)	20	Mixing three way valve(field supply)
5	Check valve(field supply)	21	Zone B Floor Heating Pump(field supply)
6	Y-type filter(field supply)	22	Floor Heating Inlet Water Temp. Sensor(Customized)
7	AHS water pump(field supply)	23	Water pump for solar heater(field supply)
8	Auxiliary Heat Source (AHS)(field supply)	24	heat exchange coil for hot water tank
9	Hot Water Three-way Valve(field supply)	25	Hot water tank(field supply)
10	Safety valve(field supply)	26	Temp. sensor for hot water tank(accessory)
11	Expansion tank(field supply)	27	Domestic hot water, such as for bathrooms, etc.
12	Vent valve(field supply)	28	Return water pump(field supply)
13	Buffer tank(field supply)	29	Temp. sensor for solar heater(Customized)
14	Temp. sensor for buffer tank(accessory)	30	Solar heater(accessory)
15	Electric heater for buffer tank(field supply)	31	Wired controller(accessory)
16	Water pump for Zone A(field supply)	32	Room thermostat(accessory)
Note: The illustrations in the application guidelines are meant for reference only, and are NOT to be used as detailed hydraulic diagrams. The detailed hydraulic dimension and balancing are NOT shown, and are the responsibility of the installer			

Space heating/cooling

The operation mode, and temperature are set on the display. The Heating/Cooling mode ON/OFF of ZONE A and ZONE B is controlled by room temperature. Zone A can operate in cooling mode or heating mode, while Zone B can only operate in heating mode; During operation, targeted water temperature is the higher setting water temperature of ZONE A and ZONE B.

External pump operation

When Zone A turns ON, PUMPo starts running; When Zone A turns OFF, PUMPo stops running.
When Zone B turns ON, S3V3 switches between ON and OFF(For three-way valve) or adjust the opening(For mixing valve) according to the set TFLin, and PUMPmix remains ON; When Zone B turns OFF, S3V3 remains OFF and PUMPmix stops running.

The domestic water tank, AHS (auxiliary heat source), TBH (water tank electric auxiliary heat), and solar control can be connected.The control method is the same as what is described in the above section.

6 Unit installation

6.1 Precautions for installation

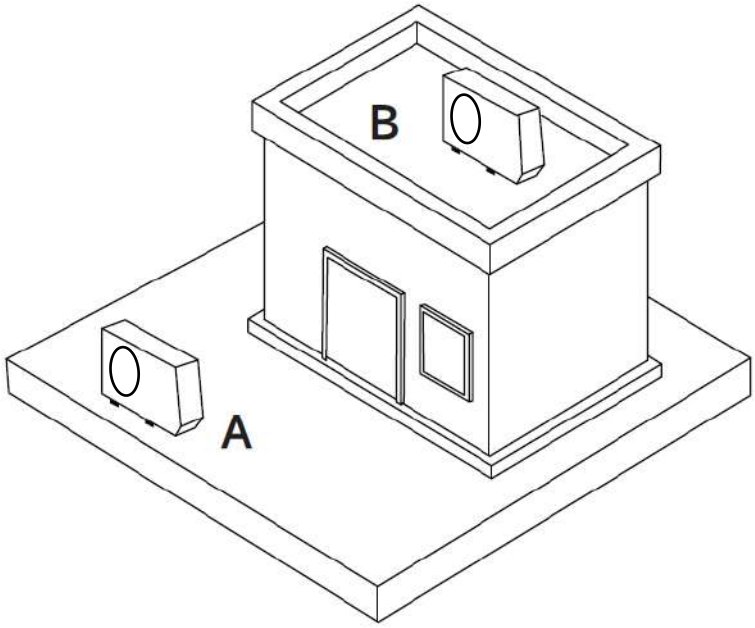

(A) Installation on a ground

(B) Installation on a flat roof

6.1.1 Precautions for installation on a ground

1. Avoid installing in room corners, between walls, or between fences.
2. Prevent air from the air outlet being drawn back into the intake.
3. Ensure no water accumulates on the base.
4. Ensure the base has good water absorption.
5. Prepare a bed of gravel and rubble for condensate drainage.
6. Choose an installation location with no significant snow accumulation in winter.
7. Select a location where the air inlet is not affected by strong winds, position the unit crosswise to the wind direction when possible.
8. If the installation location is not wind-protected, a protective wall is necessary.
9. Note noise emissions; avoid room corners, recesses, or locations between walls.
10. Choose an installation location with good sound absorption, such as areas with grass, hedges, or fencing.
11. Route hydraulic lines and electrical wires underground.
12. Install a safety pipe leading from the outdoor unit through the building wall.

6.1.2 Precautions for installation on a flat roof

1. Install the product only in buildings with a solid structural construction and full cast concrete ceilings.
2. Do not install the product in buildings with wooden structures or lightweight roofs.
3. Choose an easily accessible installation location to allow regular removal of foliage or snow from the product.
4. Select a location where the air inlet is not affected by strong winds; position the unit crosswise to the wind direction when possible.
5. If the installation location is not wind-protected, a protective wall is necessary.
6. Note noise emissions; maintain adequate clearance from adjacent buildings.
7. Route hydraulic lines and electrical wires appropriately.
8. Install a wall duct.

6.1.3 Occupational safety

1. Ensure safe access to the flat roof.

2. Maintain a 2-meter safety zone from fall edges, along with the clearance required for working on the product; this safety zone must be inaccessible.

3. If this is not feasible, install technical fall protections at fall edges (e.g., sturdy railings) or set up technical safety equipment such as scaffolding or safety nets.

4. Maintain adequate clearance from roof escape hatches and flat-roof windows. Use appropriate protective equipment (e.g., barriers) to prevent people from stepping on or falling through these hatches and windows.

6.2 Installation site requirements for the outdoor unit

 **CAUTION**
1. Be sure to distinguish between the unit's inlet and outlet.
2. The unit should be stored in a room free of continuously operating ignition sources (e.g., open flames, operating gas appliances, or operating electric heaters).
3. Refer to the unit's installation dimensions during installation.
4. Do not install the unit in areas frequently used as workplaces. During construction work (e.g., grinding) that generates large amounts of dust, the unit must be covered.
5. Take note of the unit's installation spacing.
 **NOTICE**
1. Never stack the units on top of one another.
2. Do not hang the unit from a ceiling.

Environment

1. For safety and optimal unit performance, the installation site must have sufficient airflow.

2. For maintenance and service, the installation site should be easily accessible.

3. If the installation site has a high risk of impact (e.g., a vehicle shunting area), impact protection measures must be taken.

4. Keep the unit away from flammable substances and gases.

5. Keep the unit away from heat sources.

6. Keep the unit as protected from raindrops as possible. Do not expose the outdoor unit to dirty, dusty, or corrosive environments.

7. Keep the unit away from ventilation openings and ducts.

Nature

Be aware of the impact of nature:

- Vining plants may block the unit's air inlets and outlets as they grow.
- Fallen leaves may block the unit's air inlets or clog the air channels.
- Insects, snakes, or small animals may enter the unit. Wild animals may bite or damage the unit's piping and wiring.

Noise impact

1. Choose an installation site as far as possible from living rooms and bedrooms.

2. Note the noise emissions, choose an installation site as far as possible from the windows of adjacent buildings.

Altitude

The unit is designed for use at altitudes below 2,000 meters. If installed above this altitude, its performance and reliability cannot be guaranteed.

6.3 Installation distance requirement for the outdoor unit

Models: iGXC08

Unit: mm

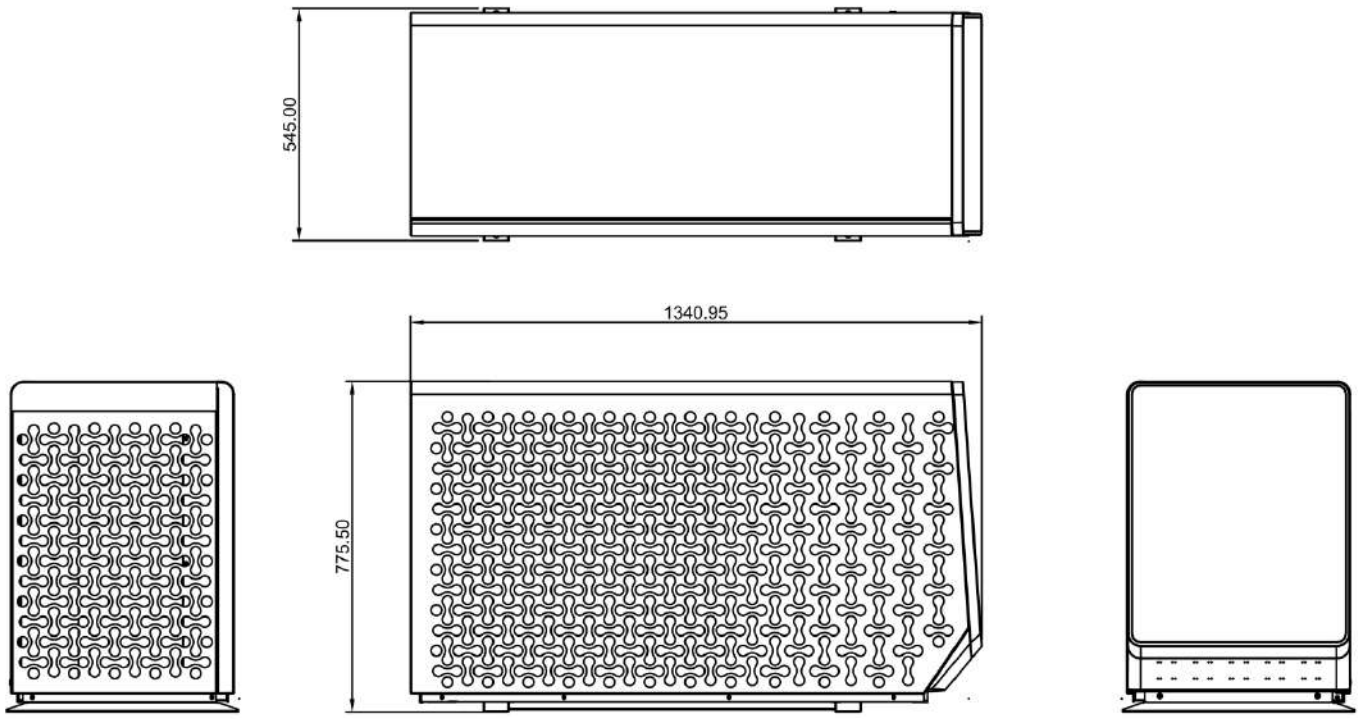

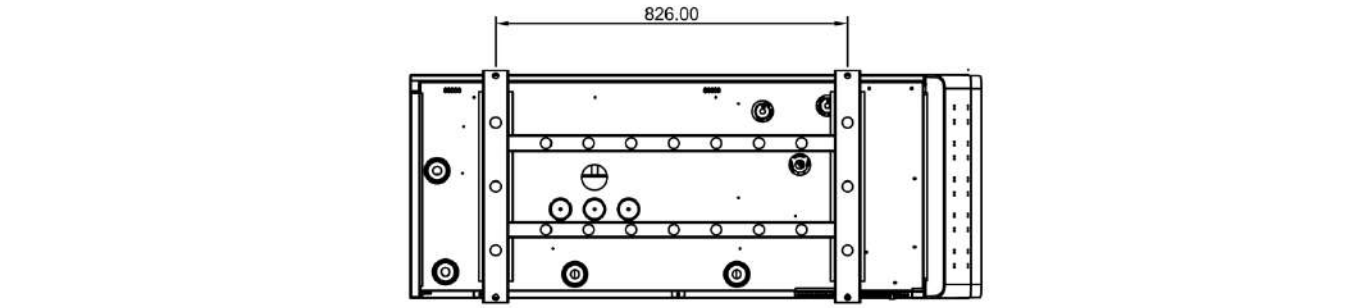

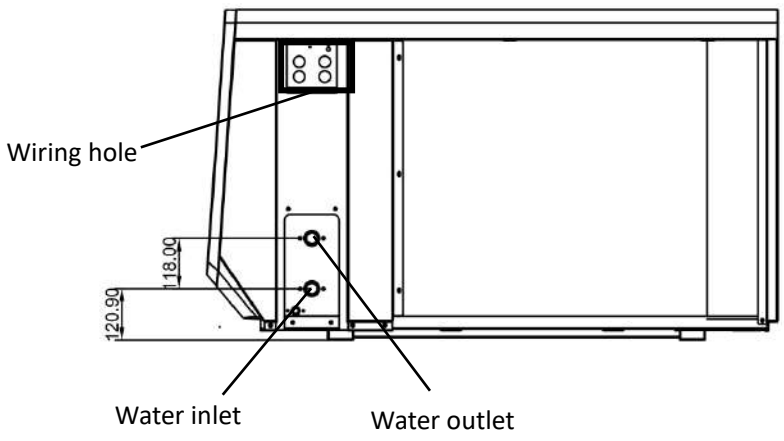

Models: iGXC11/ iGXC11T/ iGXC13/ iGXC13T

Unit: mm

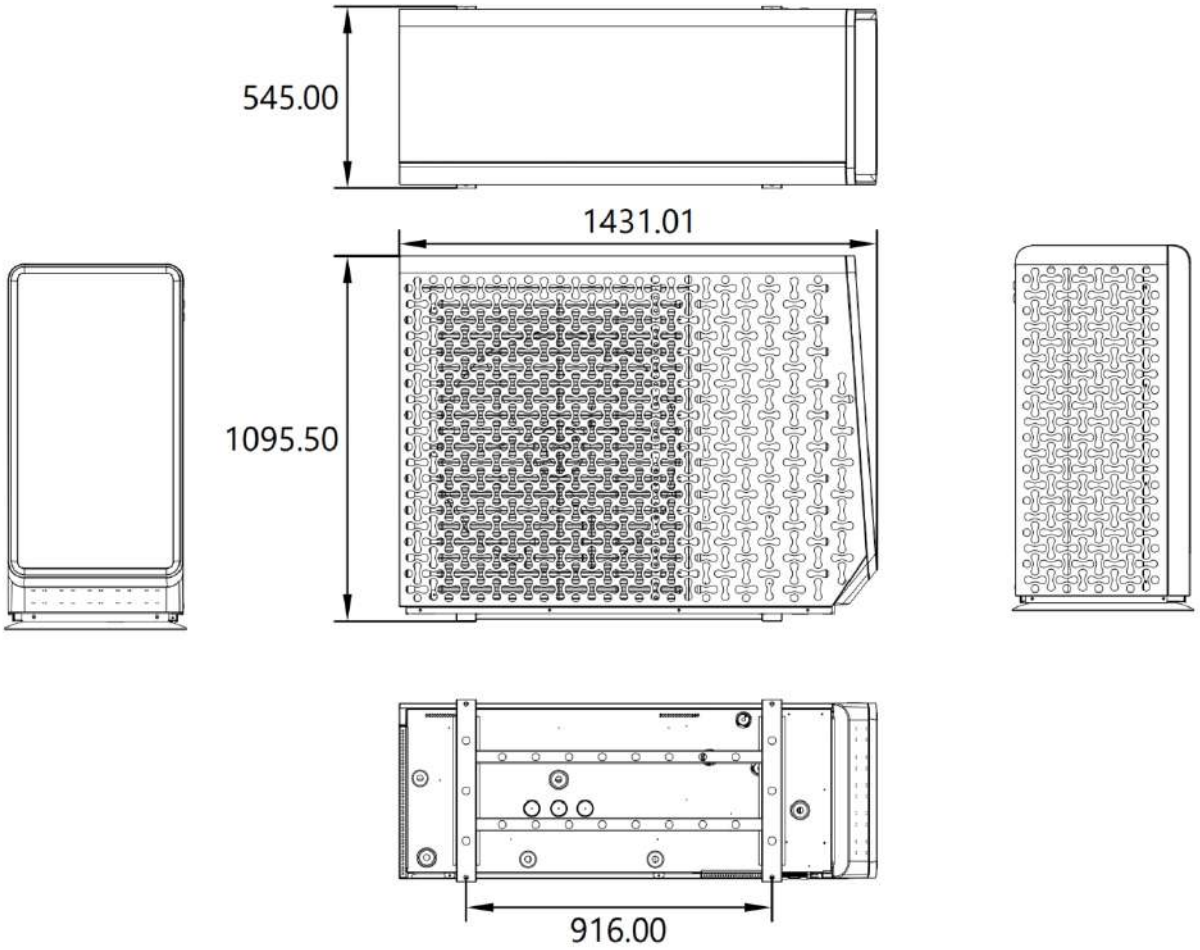

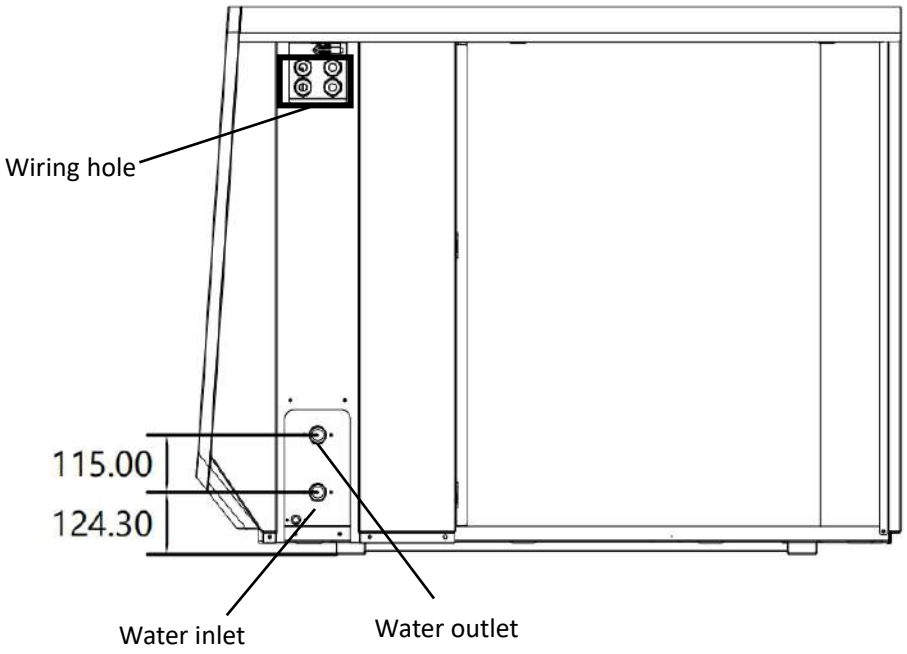

Models: iGXC16/ iGXC16T

Unit: mm

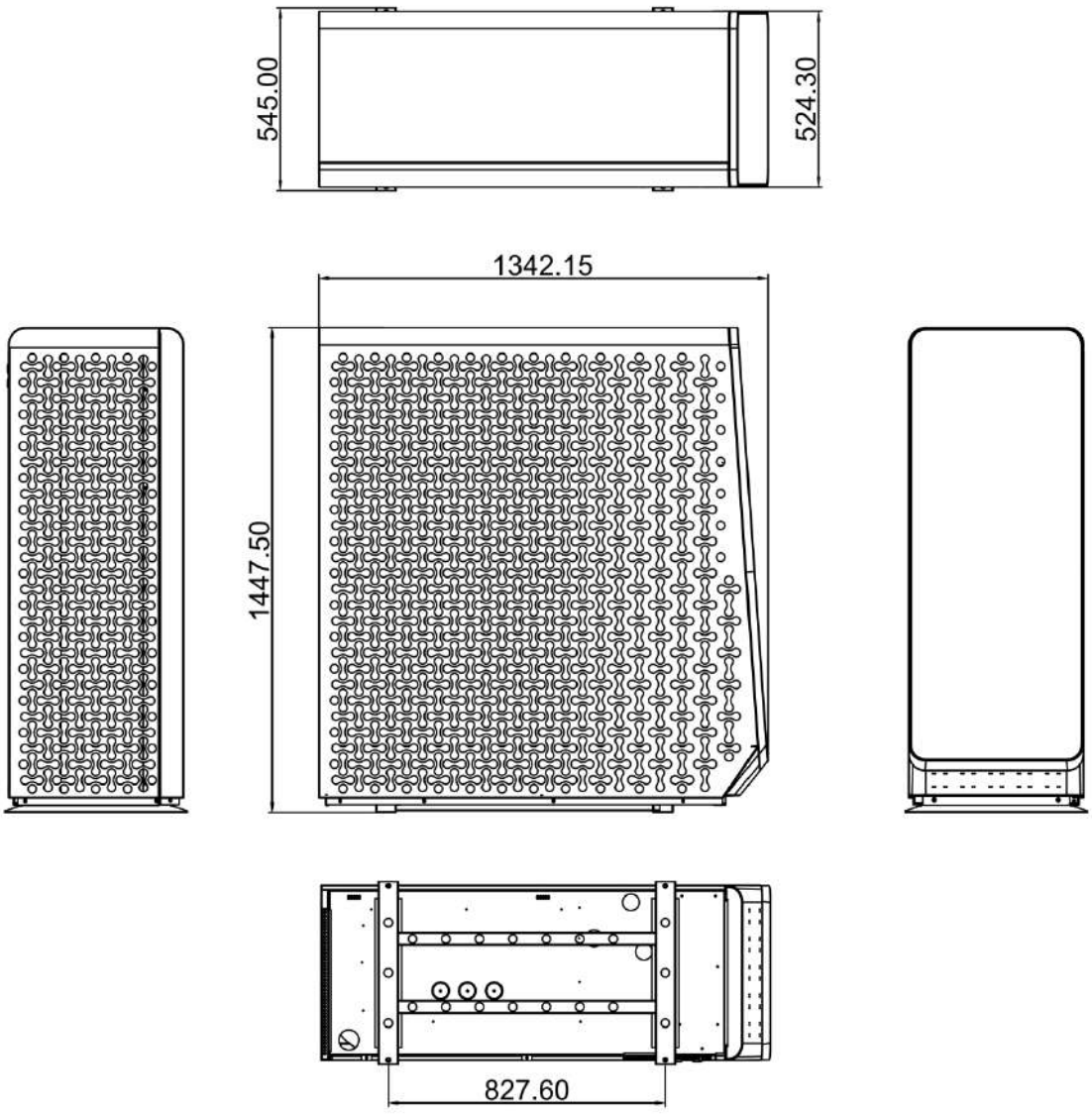

6.3.1 Single installation requirements

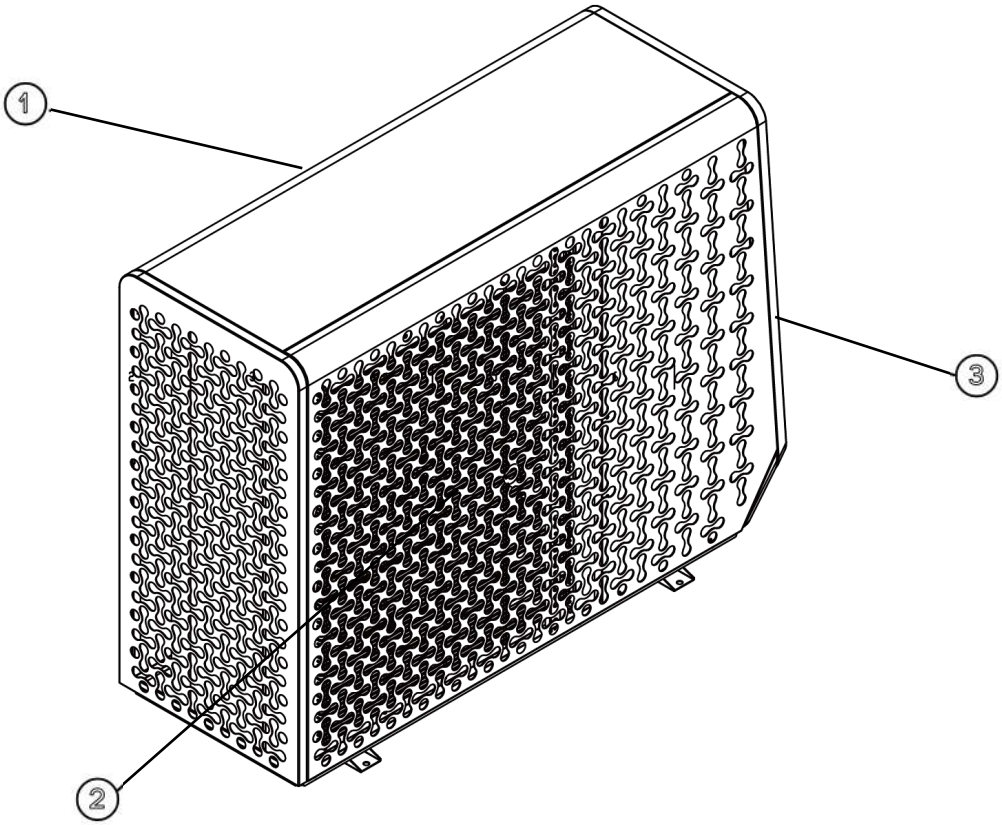

1. Air inlet
2. Air outlet
3. Maintenance Panel

Installation space:

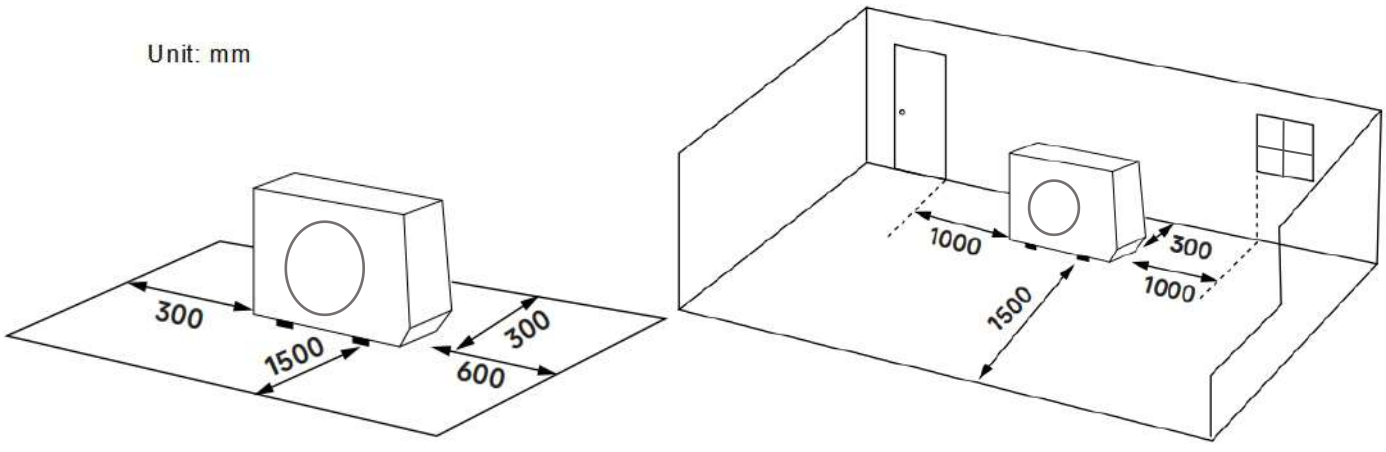

It is recommended to maintain the installation distances shown in the figure when installing the heat pump outdoor.

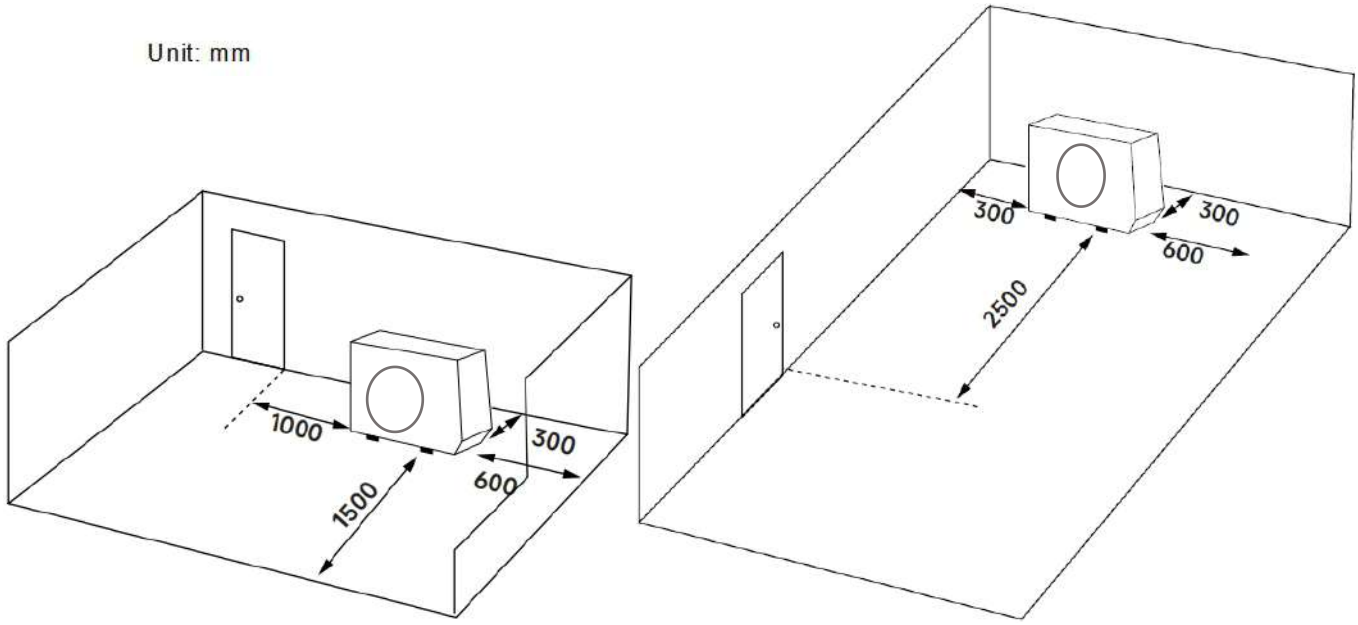

6.3.2 Cascade installation requirements

Outdoor units must be spaced to allow sufficient air to flow through each unit. Adequate airflow across the heat exchanger is essential for outdoor units to operate properly. The following figure illustrates the minimum distance required for a multi-unit installation setup.

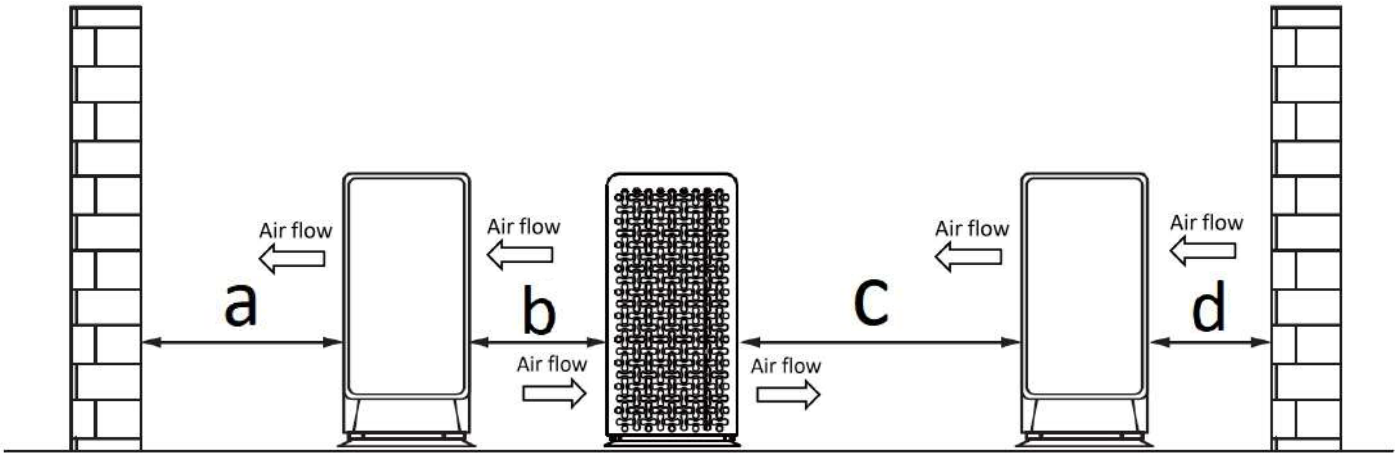

Model	a(mm)	b(mm)	c(mm)	d(mm)
iGXC08	1500	600	3000	300
iGXC11	1500	600	3000	300
iGXC11T	1500	600	3000	300
iGXC13	1500	600	3000	300
iGXC13T	1500	600	3000	300
iGXC16	2000	800	4000	300

Unit: mm

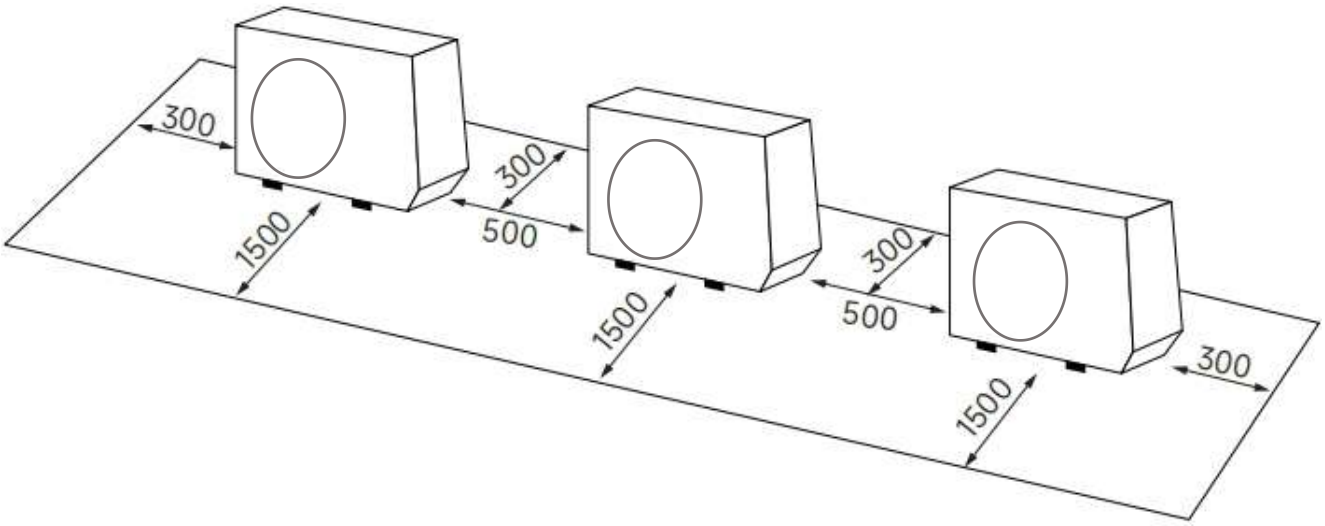

6.4 Special requirements for the outdoor unit

The outdoor unit contains an internal refrigerant circuit (R290), but no on-site refrigerant piping or charging is required.

Please note the following requirements and precautions:

WARNING
1. Do not pierce or burn components of the refrigerant cycle.
2. Do not use any methods to accelerate defrosting or clean the equipment other than those
3. Note that R290 refrigerant has no odor.
4. The appliance must be protected from mechanical damage and stored in a well-ventilated room (e.g., away from open flames, gas appliances, or electric heaters).
5. Ensure that installation, service, maintenance, and repair comply with iGarden's instructions and applicable legal regulations, and are carried out solely by authorized personnel.

6.4.1 In cold climate

It is advisable to position the unit with its rear face flush against a wall. This setup not only boosts stability but also uses the wall to shield the rear components from direct exposure to wind, rain, or debris, helping to extend operational reliability.

A lateral snow canopy should be installed on top of the unit, specifically designed to prevent sideways snow buildup during extreme weather events—such as heavy snowstorms with strong crosswinds. The canopy's dimensions should extend far enough beyond the unit's sides to block drifting snow, stopping it from getting stuck in ventilation gaps or piling up on critical exterior surfaces.

Additionally, the unit must be installed on an elevated pedestal or wall-mounted to maintain a minimum 100mm clearance between the unit's base and any potential snow layer. This gap is vital to avoid direct contact with snow, which could cause moisture-induced corrosion, block bottom vents, or hinder heat dissipation. For pedestal installations, ensure the structure is sturdy enough to support the unit's weight and prevent shifting in icy conditions; for wall mounts, use heavy-duty brackets securely fastened to load-bearing walls to ensure stability.

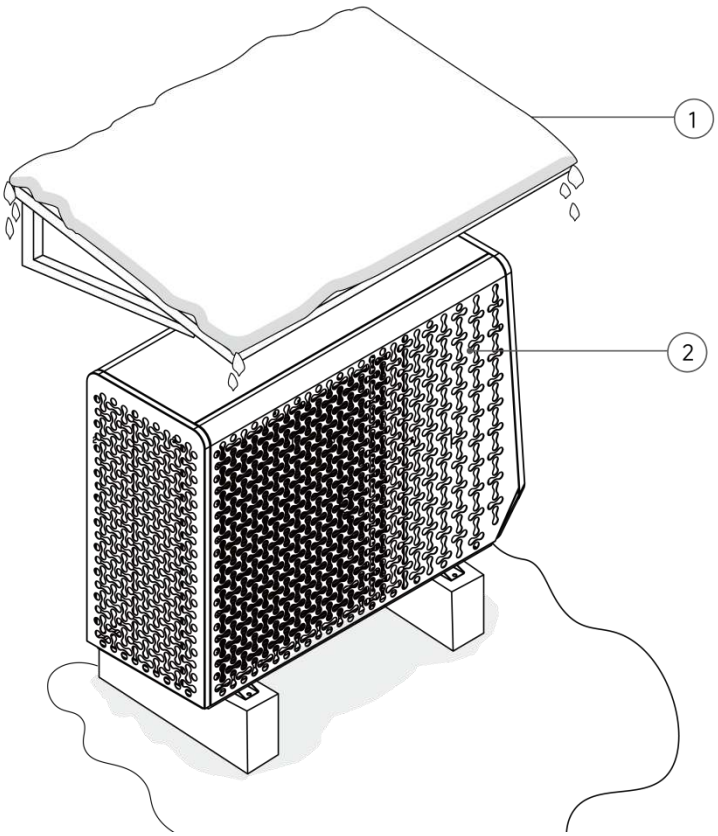

① Canopy or alike

② Pedestal in case of installation on a ground

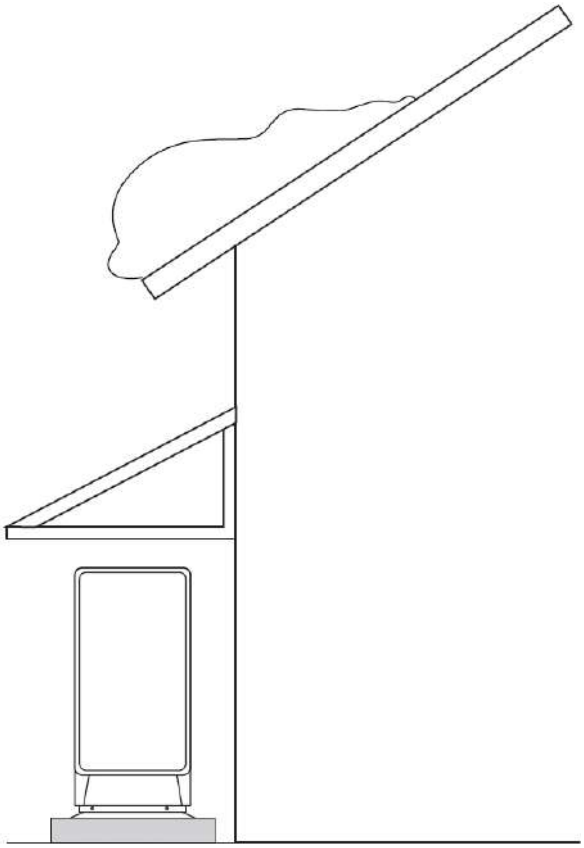

If there is a risk of snow slipping from the roof, a protective roof or cover must be erected to protect the heat pump, pipes, and wiring.

6.4.2 Strong wind

Strong winds (≥5 m/s) blowing directly at the outdoor unit's air outlet can cause a short circuit (where discharged air is drawn back in).

This may lead to the following issues:

1. Reduced operational capacity.
2. Frequent accelerated frosting during heating operation;
3. Operational disruptions caused by high and low pressure abnormalities.
4. Fan damage (if strong winds blow continuously on the fan, it may spin excessively fast and eventually break).

It is recommended to install a baffle plate if the air outlet is exposed to wind and install the outdoor unit with its air inlet facing the wall, ensuring it is not directly exposed to wind.

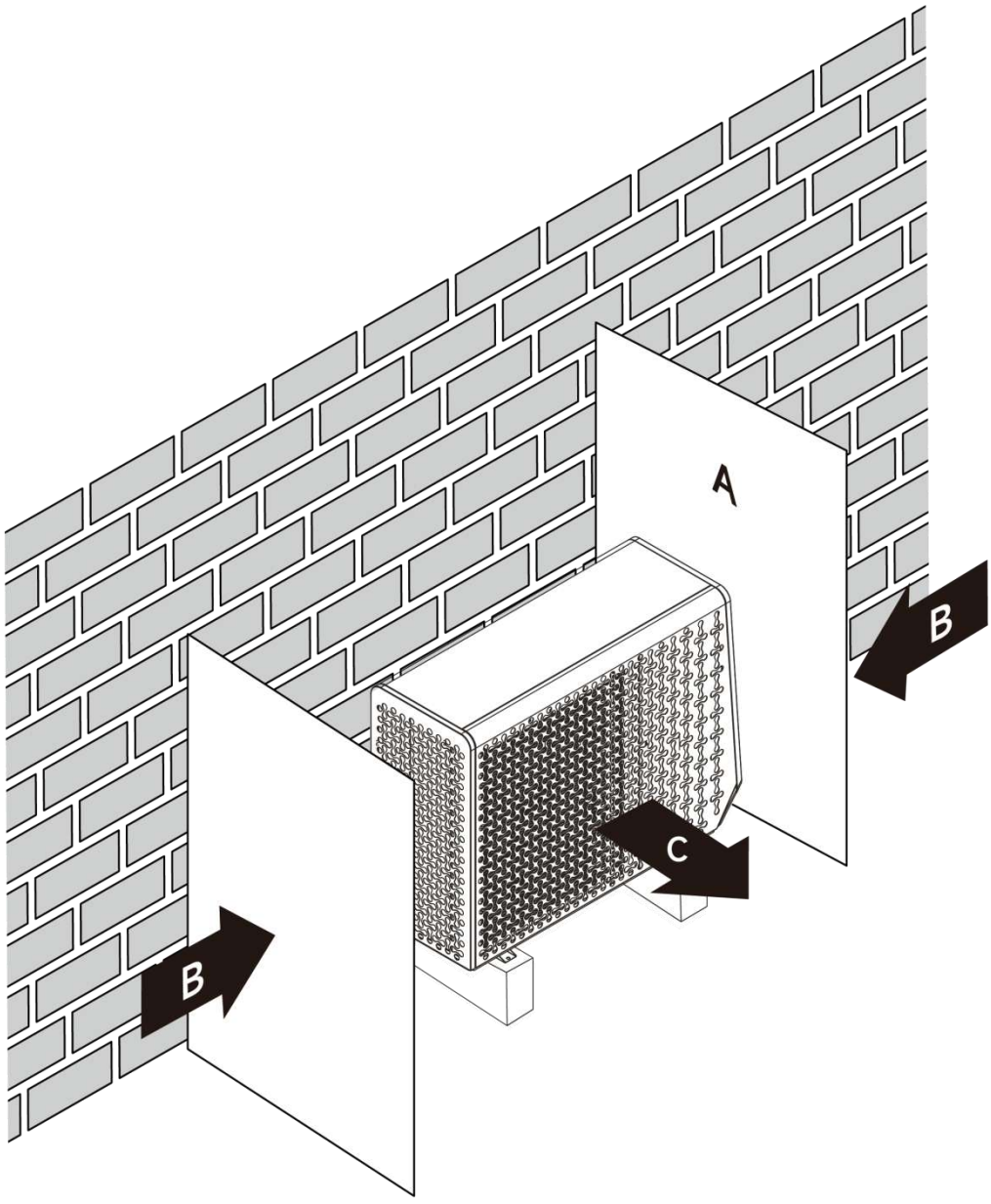

A Baffle plate

B Prevailing wind direction

C Air outlet

6.4.3 Seaside installation

If the installation site is in close proximity to a coastline, ensure the product is protected from water spray with an additional protective device.

Sea winds carry saline substances inland. Ensure the outdoor unit is not directly exposed to sea winds. This helps prevent corrosion caused by high salt levels in the air, which could shorten the unit's lifespan.

Install the outdoor unit away from direct sea winds. Below is a reference diagram for coastal installations, provided for reference only. To extend the unit's service life, consult professionals for a customized maintenance plan and follow it.

Example: Behind the building.

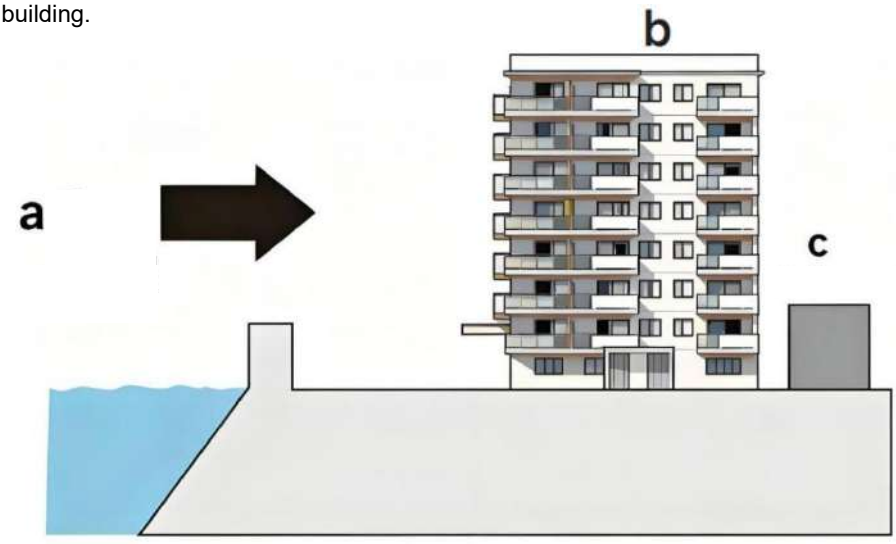

a Sea wind
b Building
c Outdoor unit

If the outdoor unit is exposed to direct sea winds, install a windbreaker.

1. The height of the windbreaker should be≥1.5×the height of the outdoor unit.
2. Ensure service space requirements are taken into account when installing the windbreaker.

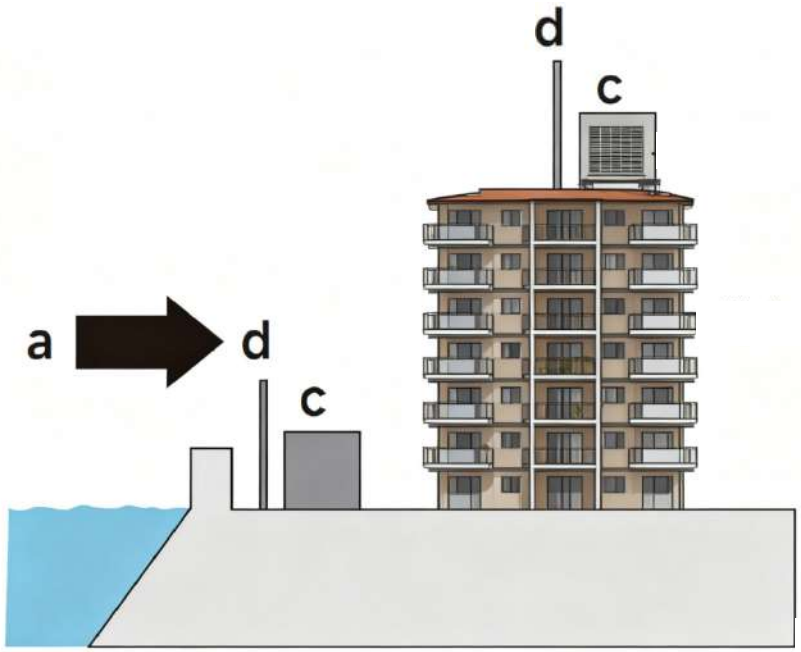

a Sea wind
b Building
c Outdoor unit
d Windbreaker

6.4.4 Others

Do not install the unit in the following locations:

1. Noise-sensitive areas (e.g., near bedrooms) to avoid disturbances from operational noise.

Note: If the sound is measured under actual installation conditions, the measured value might be higher than the sound pressure level mentioned in Sound spectrum in the data book due to environmental noise and sound reflections.

2. Areas where mineral oil mist, spray, or vapor may be present in the air. Plastic components could deteriorate, fall off, or cause water leakage. The unit is not recommended for installation in the following locations as they may reduce its service life

- Locations with significant voltage fluctuations
- In vehicles or vessels
- Locations with long-term exposure to strong sunlight

Note: Prolonged exposure of the unit's ambient temperature sensor to sunlight may negatively affect the sensor and cause adverse impacts on the unit. Use a canopy or similar structure to shade the unit.

6.5 Foundation and installing the outdoor unit

6.5.1 Foundation

Installation on a soft ground

For installations on soft ground such as lawns and soil, construct a foundation as shown in the figure below.

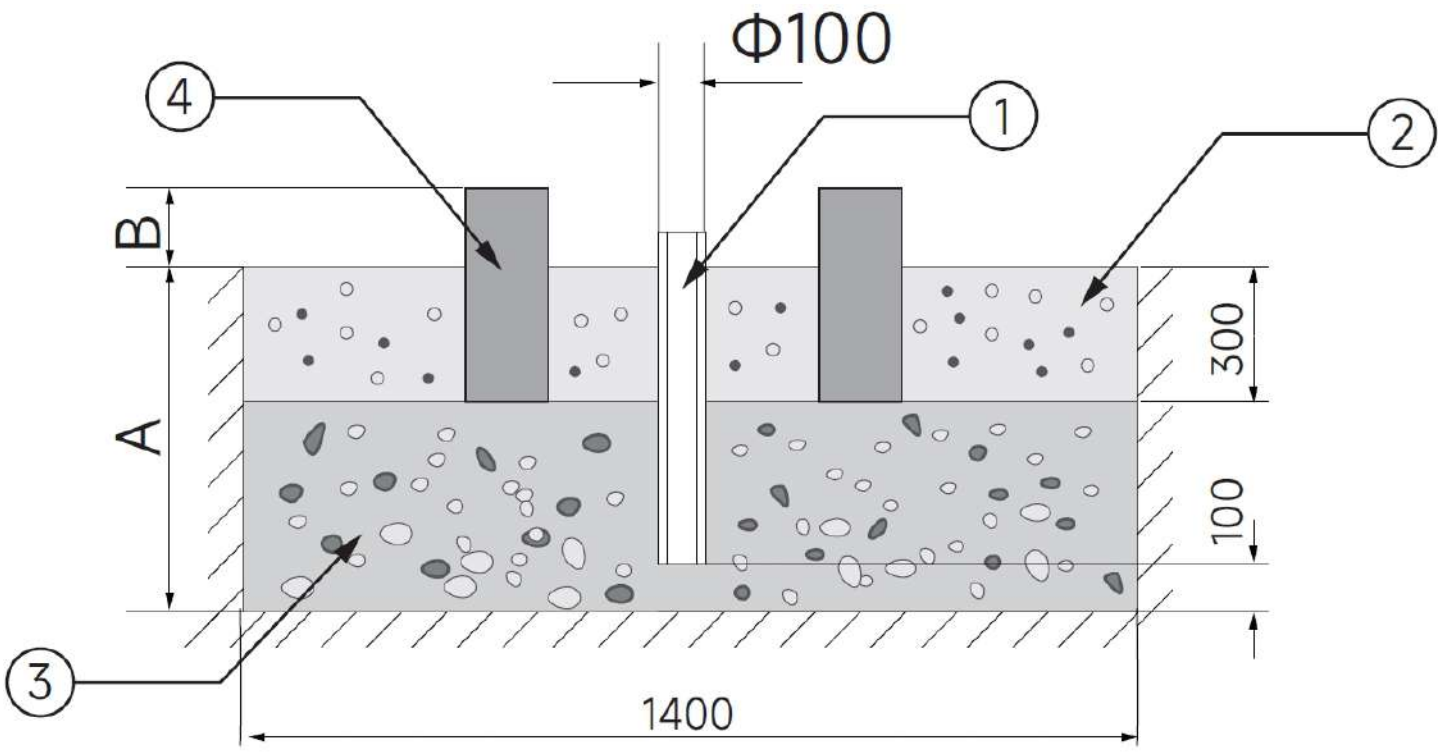

① Downpipe for drainage
② Strip foundations
③ Water-permeable coarse rubble
④ Concrete strip foundations

1. Dig a hole in the ground. For the location of the downpipe, refer to *6.6.1 Drain hole position*.
2. Insert a downpipe ① to divert the condensate.
3. Add a layer of water-permeable coarse rubble ③.
4. Calculate the depth **(A)** in accordance with local conditions.

5. Region with ground frost: minimum depth: 900 mm
6. Region without ground frost: minimum depth: 600 mm
7. Calculate the height **(B)** in accordance with local conditions. Such height should not be smaller than 100 mm.
8. Create three concrete strip foundations ④. The recommended dimensions can be found in the figure.
9. Make sure the three foundations are level. There are no restrictions on the width or length of the foundations, provided that the unit can be mounted on the foundation properly and the downpipe for drainage is not blocked.
10. Add a gravel bed between and beside the strip foundations ② to divert the condensate.

Installation on a solid ground

For installations on solid ground (e.g., concrete), construct a concrete strip foundation similar to that described in the previous section. The strip foundation must have a height of at least 100 mm.

6.5.2 Unit mounting

Installation with a foundation: Secure the unit using foundation bolts. (Six Φ10 expansion bolts, along with nuts and washers, are required and supplied on-site.) Drive the foundation bolts into the foundation to a depth of 20 mm.
Installation without a foundation: Install appropriate anti-vibration pads and ensure the unit is level.

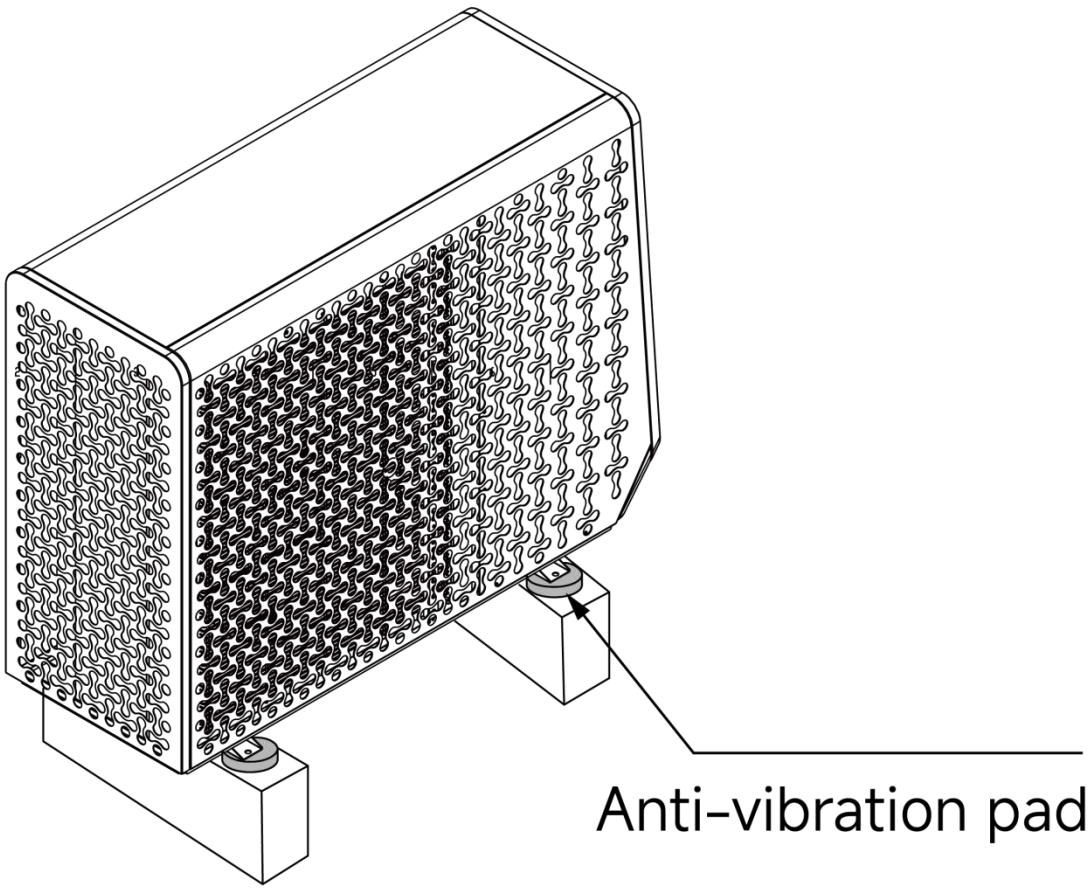

6.6 Drainage

1. Ensure proper evacuation of condensation water.
2. Install the unit on a base to ensure adequate drainage and prevent ice accumulation.
3. Prepare a water drainage channel around the foundation to direct wastewater away from the unit.
4. Prevent drain water from flowing over footpaths to avoid slipperiness during freezing ambient temperatures.
5. If installing the unit on a frame, fit a waterproof plate within 150 mm of the unit's bottom to prevent water from entering the unit and to avoid drain water dripping (see the following figure).

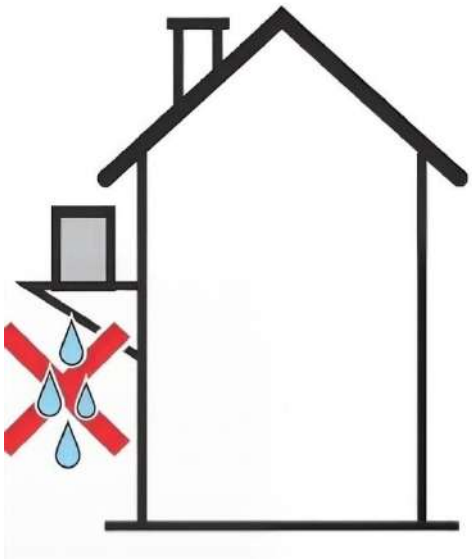

CAUTION
1. Exercise caution with condensate when removing the rubber plug from the additional drain hole.
2. Ensure condensate is properly drained. Collect and direct any condensate that may drip from the unit's base into a drain tray. Prevent water from dripping onto the floor, as this could create a slip hazard—especially in winter.
3. In cold climates, it is strongly recommended to install a belt heater to avoid unit damage caused by frozen drain water, particularly when drainage rates are low.
NOTICE
1. If the unit is installed in a cold climate, take appropriate measures to prevent the drained condensate from freezing. We recommend the following: - Insulate the drain hose. - Install a drain tube heater (supplied on-site).
2. Provide at least 150 mm of clearance beneath the unit. Additionally, ensure the unit is positioned at least 100 mm above the expected snow level.

6.6.1 Drain hole position

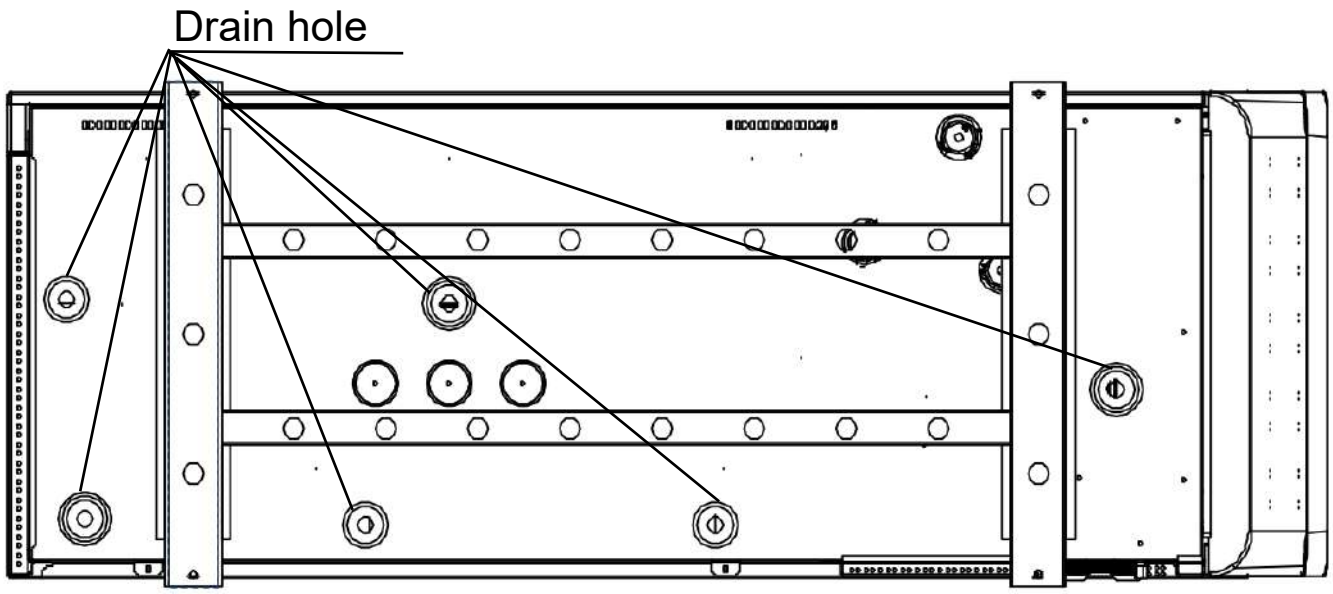

Note: If there is no need for centralized drainage or the local climate is relatively humid, it is recommended to open all the rubber plugs to prevent condensate from freezing on the chassis.

6.6.2 Drainage layout

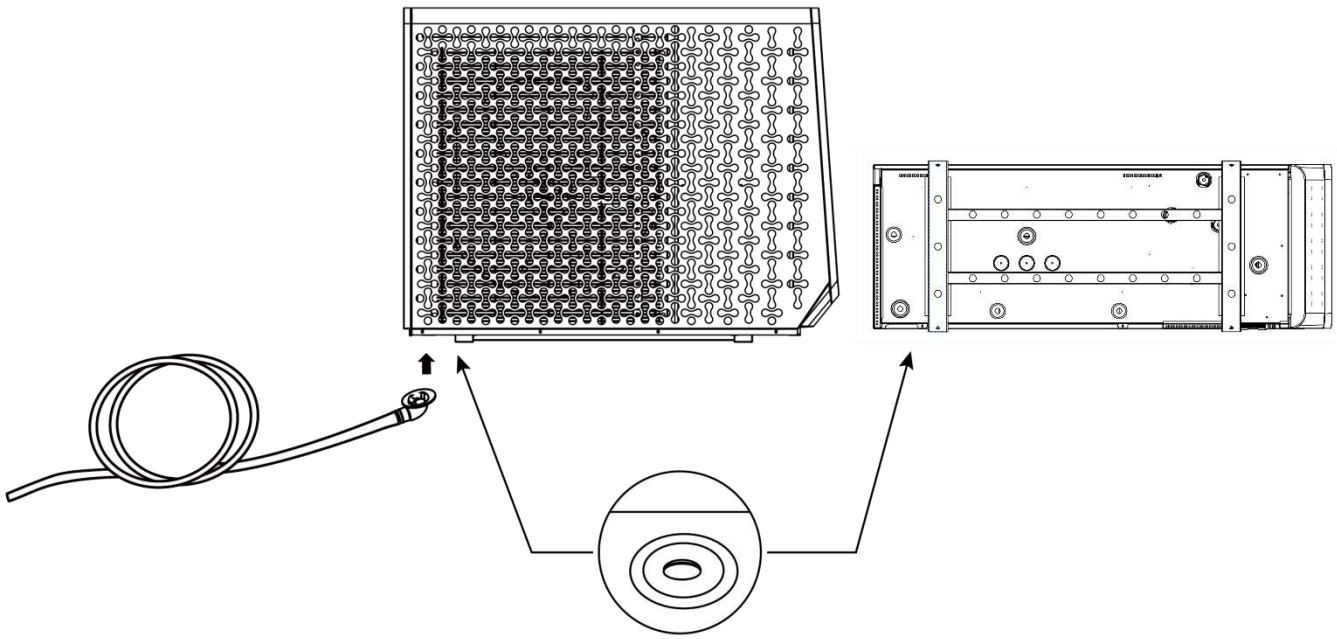

Installation on a soft ground:

① Draining condensate into a gravel bed

For ground installation, condensate must be discharged via a downpipe into a gravel bed located in a frost-free area.

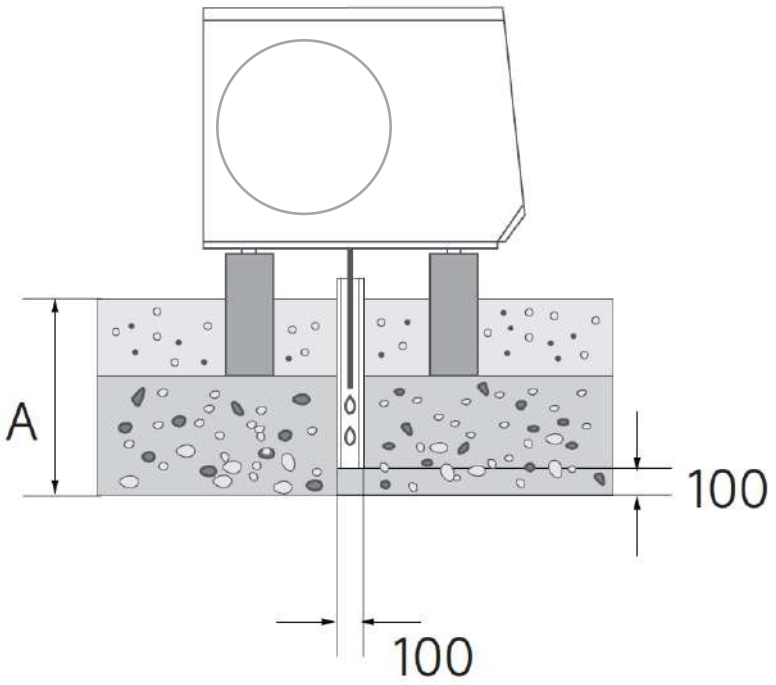

The downpipe must lead into a sufficiently large gravel bed to allow the condensate to trickle away freely.

② Draining condensate through a pump sump/soak away

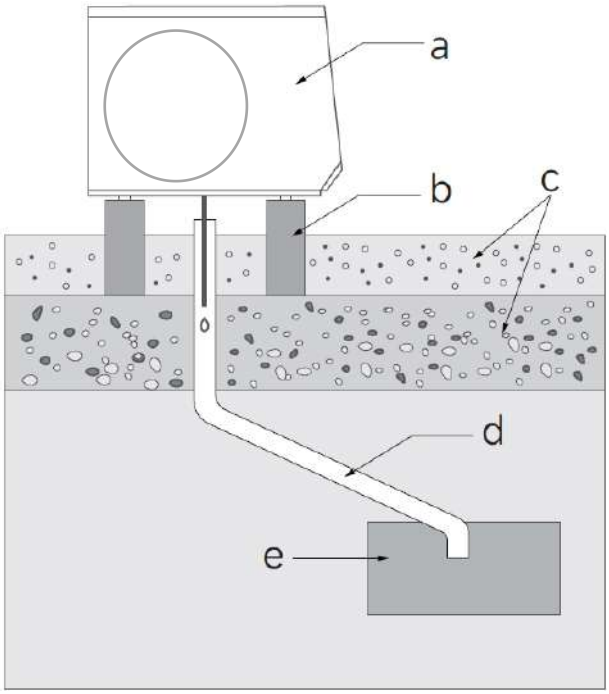

a-Outdoor unit

b-Concrete strip foundations

c–Foundation (See 5.3.1 Installation on a ground)

d-Drain pipe(at least DN 40)

e-Pump sump/soak away

③ Sewer

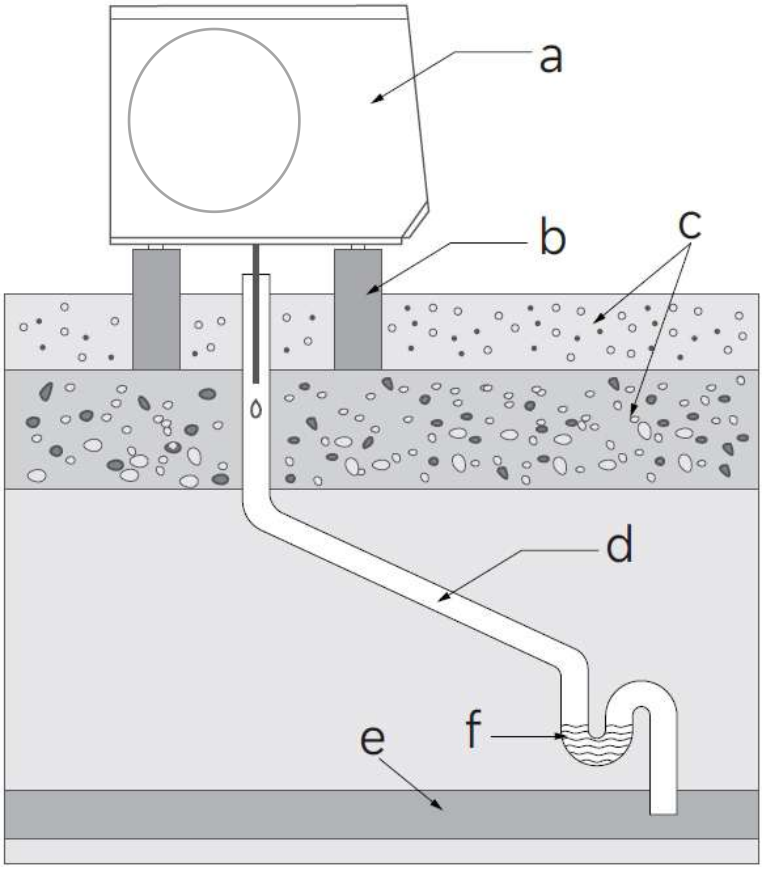

a-Outdoor unit

b-Concrete strip foundations

c–Foundation (See 5.3.1 Installation on a ground)

d-Drain pipe (at least DN 40)

e-Sewer

f-Stench trap in an area free from frosting risks

Installation on a solid ground:

Direct the condensation pipe to a sewer, pump sump, or soak away.

The drain plug included in the accessory pack cannot be bent to change direction. For this reason, use a hose to channel the condensate into a sewer, pump sump, or soak away via a gully, balcony runoff, or roof run-off.

Open gullies located within the safety zone do not pose any safety hazards.

7 Hydraulic installation

7.1 Precautions for hydraulic installation

CAUTION
1. The heat exchanger may be damaged by freezing water due to low water flow.
2. Incorrect orientation of the water outlet and inlet can lead to unit malfunction.
3. Do not apply excessive force when connecting on-site supplied pipes, and ensure proper alignment. Deformation of water pipes can cause unit malfunction.
4. The unit is intended for use solely in a closed water system.
5. Sediment may damage the plate heat exchanger, and the absence of a strainer poses a risk of refrigerant leakage.
6. If a potable water source is used as the equipment's water supply, a backsiphonage prevention device must be installed between the potable water source and the equipment.
7. The installation of a Y-Type strainer at the water inlet is mandatory. To prevent metal particles from damaging the unit, it is recommended to install a magnetic filter before the Y-Type strainer.
NOTICE
1. For plastic pipes, ensure they are completely oxygen diffusion-tight in accordance with DIN 4726. Oxygen diffusion into the piping can cause excessive corrosion.
2. When circulation in each space heating or cooling loop is controlled by remotely operated valves, it is critical to guarantee a minimum water volume—even when all valves are closed.
3. Oxygen diffusion into the piping can lead to excessive corrosion.
4. When a 3-way valve is used in the water loop, a ball valve is recommended to ensure full separation between the domestic hot water loop and the floor heating water loop.
5. To optimize unit efficiency, install the 3-way valve and domestic hot water tank as close to the unit as possible.
6. The interior of the pipes must be clean.
7. When using non-copper metallic piping, ensure two different materials are insulated from each other to prevent galvanic corrosion.
8. Always use materials compatible with the water in the system and the materials used in the unit.
9. Ensure that components installed in the field piping can withstand the system's water pressure and temperature.
10. Drain taps must be installed at the lowest points of the system.
11. Air vent valves must be installed at the highest points of the system.

7.2 Water circuit requirements

1. Connecting piping

- Legislation: All piping connections must adhere to applicable legislation and the instructions in the "Installation" chapter, with careful attention to the water inlet and outlet.
- Force: Do not apply excessive force when connecting piping. Piping deformation can cause unit malfunction.
- Tools: Use only suitable tools when handling brass (a soft material); improper tools will damage the pipes.
- Air, moisture, dust: Entry of air, moisture, or dust into the circuit may lead to problems.

2. Piping

- Length: It is recommended to avoid long pipe runs between the domestic hot water tank and hot water endpoints (e.g., showers, baths) and to eliminate dead ends.
- Diameter: Select the water pipe diameter based on the required water flow and the pump's available external static pressure.

3. Water

- Flow: The minimum water flow required for indoor unit operation is listed in the table below. This flow must be guaranteed in all cases; if it is insufficient, the outdoor unit will stop operating.

Model	Minimum required flow rate
iGXC08	1.05m³/h
iGXC11	1.26m³/h
iGXC11T	1.26m³/h
iGXC13	1.54m³/h
iGXC13T	1.54m³/h
iGXC16	2.10m³/h
iGXC16T	2.10m³/h

- Domestic hot water pressure: The maximum water pressure is 4 bar (=0.4 MPa). Adequate safeguards must be installed in the water circuit to prevent exceeding this maximum. The minimum operating water pressure is 1 bar (=0.1 MPa).
- Space heating/cooling circuit pressure: The maximum water pressure is 3 bar (=0.3 MPa). Adequate safeguards must be installed in the water circuit to prevent exceeding this maximum. The minimum operating water pressure is 1 bar (=0.1 MPa).
- Temperature: All installed piping and piping accessories (valves, connections, etc.) must be able to withstand the specified temperatures.

4. Field supply components

- Water compatibility: Use only materials compatible with the system's water and the materials of the indoor unit.
- Water pressure and temperature resistance: Ensure all components in the field piping can withstand the system's water pressure and temperature.

5. Drainage

- Low points: Install drain taps at all low points of the system to allow complete drainage of the water circuit.
- Pressure relief valve: Properly connect the drain hose to a drain to prevent water from dripping out of the unit.

6. Domestic hot water tank

- Capacity: To avoid water stagnation, the storage capacity of the domestic hot water tank must match the daily domestic hot water consumption.
- Post-installation flushing: Immediately after installation, flush the domestic hot water tank with fresh water. Repeat this flushing at least once daily for the first 5 consecutive days after installation.
- Extended standstills: If hot water is not used for an extended period, flush the equipment with fresh water before resuming use.
- Disinfection: For information on the domestic hot water tank's disinfection function, see 9.5.2 Disinfection Function

7. Others

- Insulation: Insulate piping up to the base of the heat exchanger.

- Freeze protection: Implement measures to protect against freezing.
- Closed circuit: The indoor unit must only be used in a closed water system. Use in an open water system will cause excessive corrosion.
- Air vents: Install air vents at all high points of the system, ensuring they are easily accessible for servicing. The indoor unit is equipped with two automatic air purges; ensure these are not over-tightened to allow automatic air release from the water circuit.
- Zinc-coated parts: Never use zinc-coated parts in the water circuit. The unit's internal water circuit uses copper piping, which can cause excessive corrosion if in contact with zinc-coated components.
- Non-brass metallic piping: When using non-brass metallic piping, insulate brass and non-brass components to prevent direct contact, thus avoiding galvanic corrosion.
- Thermostatic mixing valves: In accordance with applicable legislation, installation of thermostatic mixing valves may be required.
- Hygienic measures: The installation must comply with applicable legislation and may require additional hygienic installation measures.
- Recirculation pump: In accordance with applicable legislation, a recirculation pump may need to be connected between the hot water endpoint and the recirculation port of the domestic hot water tank.

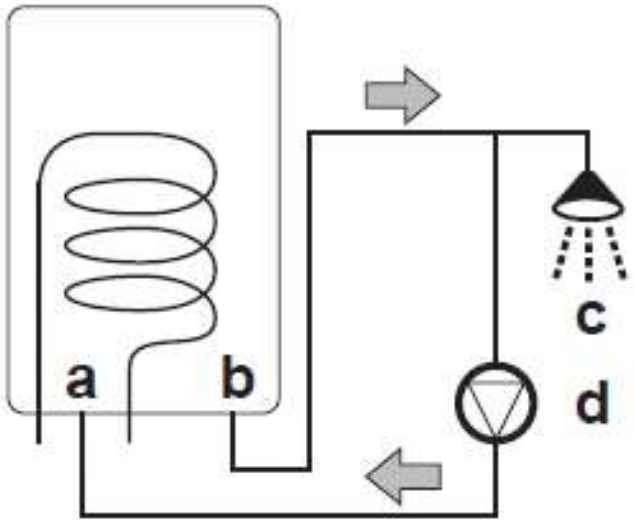

a Recirculation connection
b Hot water connection
c Shower
d Recirculation pump

7.3 Connecting water piping

7.3.1 About connecting the water piping

Before connecting the water piping

Make sure the outdoor unit is mounted well.

Typical workflow

Connecting the water piping typically consists of the following stages:

1. Connecting the water piping to the outdoor unit.
2. Connecting the recirculation piping.
3. Connecting the drain hose to the drain.
4. Filling the water circuit.
5. Filling the domestic hot water tank(If available).
6. Insulating the water piping.

7.3.2 To connect the water piping

NOTICE
1. Do not apply excessive force when connecting field piping, and ensure proper alignment. Piping deformation can cause unit malfunction.
2. Install air purge valves at all local high points.

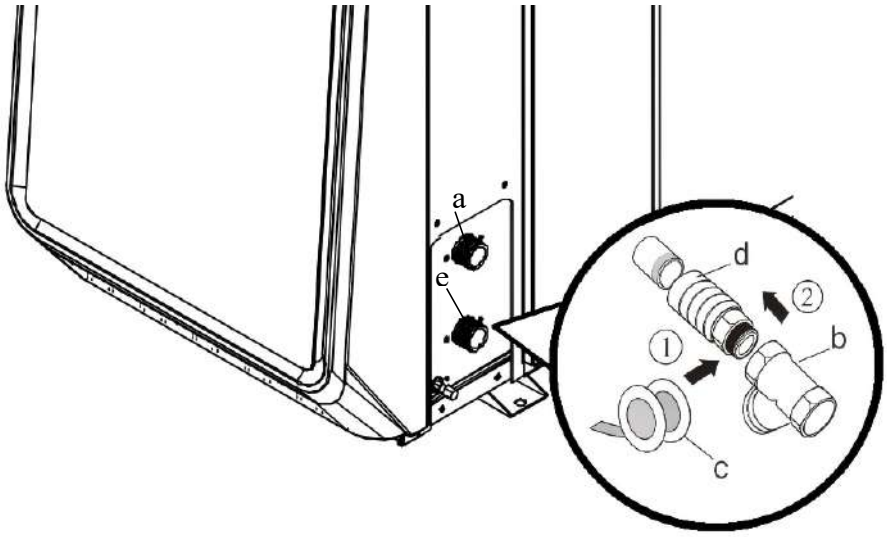

1. Connect the Y-shaped strainer to the water inlet of the unit, and seal the connection with thread sealant. (To provide access to the Y-shaped strainer for cleaning, an extension pipe can be connected between the strainer and the water inlet depending on the field conditions)
2. Connect the pipe provided on the site to the water outlet of the unit.
3. Connect the outlet of the safety valve with a hose with a suitable size and length, and guide the hose to the condensate, please refer to *6.6.2 Drainage layout*.

a	Water OUTLET (connection with screws,male,1" for 8-16 kW units)
b	Y-type strainer (Field supply)
c	Thread seal tape
d	Extension pipe (recommended,with the length depending on the field conditions)
e	Water INLET (connection with screws,male,1" for 8-16 kW units)

7.4 Filling water circuit

NOTICE
1. Ensure both air purge valves are open.
2. All automatic air purge valves must remain open after commissioning.

1. To fill the water circuit, use a field-supplied filling kit, ensuring compliance with applicable legislation.
2. Ensure the automatic air vent valve is open.
3. Maintain a water pressure of approximately 0.2 MPa (2 bar). Use the air vent valves to remove as much air from the loop as possible, as air in the water loop may cause malfunction of the backup electric heater.
4. The maximum water pressure for the water circuit must be less than 0.3 MPa (3 bar).

7.5 Freeze protection

7.5.1 Protected by software

CAUTION
1. In the event of a power failure, the aforementioned protective features will not function to safeguard the unit from freezing. Therefore, the unit should always remain powered on.
2. If the unit's power supply is to be switched off for an extended period, the water in the system pipes must be drained to prevent freezing-related damage to the unit and pipeline system.
3. In case of a power failure, add glycol to the water—glycol lowers the water's freezing point.
4. Antifreeze valves should not be used in conjunction with antifreeze in the same project to prevent waste.

The software includes specific functions to protect the entire system from freezing, utilizing the heat pump and backup heater (if available).
When the temperature of the water flow in the system drops to a specific value, the unit will heat the water using the heat pump, electric heating tape, or backup heater.

7.5.2 Protected by glycol

WARNING
1. Ethylene glycol is toxic.
2. The presence of glycol can lead to system corrosion. Uninhibited glycol becomes acidic when exposed to oxygen, and this process is accelerated by the presence of copper and high temperatures. This acidic uninhibited glycol attacks metal surfaces and forms galvanic corrosion cells, causing severe damage to the system. Therefore, the following measures are critical: - Water treatment must be properly performed by a qualified water specialist. - A glycol containing corrosion inhibitors must be selected to counteract acids formed by glycol oxidation., - Automotive glycol must not be used, as its corrosion inhibitors have a limited lifespan and it contains silicates that can foul or clog the system. - Galvanized pipes must not be used in glycol systems, as they may cause precipitation of certain components in the glycol's corrosion inhibitors.

CAUTION
1. In the event of a power failure, all software features will fail to protect the unit from freezing. Therefore, always keep the unit powered on.
1. In freezing weather, if water is not drained from the system when the unit is not in use, the frozen water may damage the water circulation components.
NOTICE
1. Ethylene glycol absorbs moisture from the air. Therefore, do not add ethylene glycol that has been exposed to air—removing the container cap increases water concentration, reducing the glycol concentration below the intended level, which could still lead to freezing of hydraulic components. Take preventive measures to minimize air exposure to ethylene glycol.
2. If glycol is added to the water, do not install freeze protection valves. This could result in glycol leaking from the valves.
3. Required glycol concentrations may vary by type. Always compare the requirements in the table above with the specifications provided by the glycol manufacturer, and adhere to the manufacturer's requirements if necessary.
4. The concentration of added glycol must never exceed 35%.
5. If the liquid in the system is frozen, the pump will not start. Note that even if measures are taken to prevent system bursting, the liquid inside may still freeze.
6. Stagnant water in the system is highly likely to freeze, causing damage.
INFORMATION
1. Protection against bursting: Glycol prevents the piping from bursting.
2. Protection against freezing: Glycol prevents the liquid inside the piping from freezing.

Glycol lowers the freezing point of water.

The required ethylene glycol concentration depends on the lowest expected outdoor temperature, as well as whether the goal is to protect the system from bursting or from freezing. More ethylene glycol is needed to prevent the system from freezing.

Add ethylene glycol in accordance with the table below.

Lowest Expected Outdoor Temperature	Burst Prevention	Freeze Prevention
–5℃	10%	15%
–10℃	15%	25%
–15℃	20%	35%
–20℃	25%	—
–25℃	30%	—
–30℃	35%	—

Add propylene glycol

Lowest Expected Outdoor Temperature	Burst Prevention	Freeze Prevention

–3℃	10%	15%
–7℃	20%	30%
–13℃	30%	45%
–25℃	40%	—
–37℃	50%	—

7.5.3 Protected by anti-freeze valve

Add anti-freeze valve in engineering installation,

Anti-freeze valves allow the drainage of pipe medium when the average temperature of the medium reaches 3℃. This can prevent ice formation in the system circuit. When used in heating engineering installations, it can effectively avoid potential damage to machines and pipes.

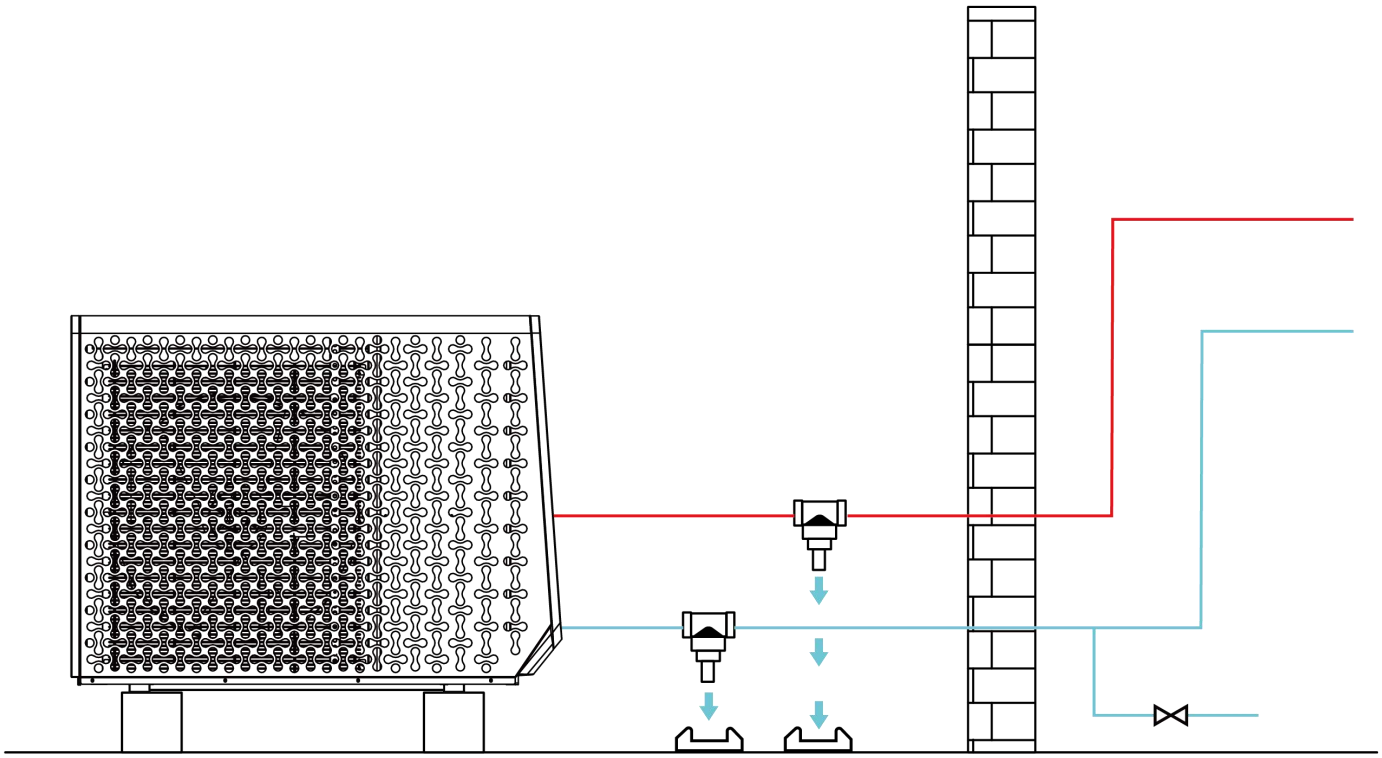

7.5.4 Others

A battery-powered circulation pump can be installed in the water circuit system. In the event of an emergency, such as a power outage, this pump will activate to continuously circulate water through the circuit, preventing freezing.

Note that its operation is not long-lasting—typically only a few days—so the situation must be addressed urgently within this timeframe.

7.6 Filling the domestic hot water tank

1. Open each hot water tap one by one to purge air from the system piping.
2. Open the cold water supply valve.
3. Once all air is purged, close all water taps.
4. Check for water leaks.

7.7 Water pipe insulation

CAUTION
1. One-way valves should not be wrapped with insulation cotton to facilitate future maintenance.
2. Do not use excessive force when connecting field piping, and ensure the piping is properly aligned. Piping deformation can cause unit malfunction.
NOTICE
1. Make sure the outside piping is insulated as instructed to protect against hazards.

All piping in the complete water circuit MUST be insulated to prevent condensation during cooling operation and a reduction in heating and cooling capacity.

For piping exposed to the air, it is recommended to use insulation with a thickness of at least that shown in the table below (with a thermal conductivity λ=0.039 W/mK).

Piping length (m)	Minimum insulation thickness (mm)
<20	19
20~30	32
30~40	40
40~50	50



For other scenarios, the minimum insulation thickness can be determined using the Hydronic Piping Calculation tool. This tool also calculates the maximum hydronic piping length from the indoor unit to the outdoor unit (or vice versa) based on the emitter pressure drop.

1. Once all water fittings and pipes are installed and connected, the water pipes must be insulated.
2. Pipe laying and insulation should be completed in a single process, with joints tightly adhered, surfaces smooth, arcs uniform, and no gaps or breaks.
3. Use external insulation materials: When installing the water tank, wrapping its exterior with insulation materials effectively reduces heat loss.
4. Regularly check the water tank's sealing: The sealing of an insulated water tank is critical to its insulation effectiveness. Inspect the tank's sealing regularly to ensure there are no water leaks or heat loss.
5. Use insulation covers: Installing an insulation cover on top of the water tank effectively reduces heat loss. Such covers can be made of insulating materials like insulation cotton or insulation adhesive.
6. Regularly clean the water tank: Internal dirt can impair insulation performance. Regular cleaning to maintain the tank's interior cleanliness improves insulation effectiveness.

8 Electrical installation

8.1 Opening the electrical box cover

To access the unit for installation and maintenance, follow the instructions below.

WARNING
1. Risk of electrocution.
2. Risk of burning.
NOTICE
1. Keep the screws properly for later use.

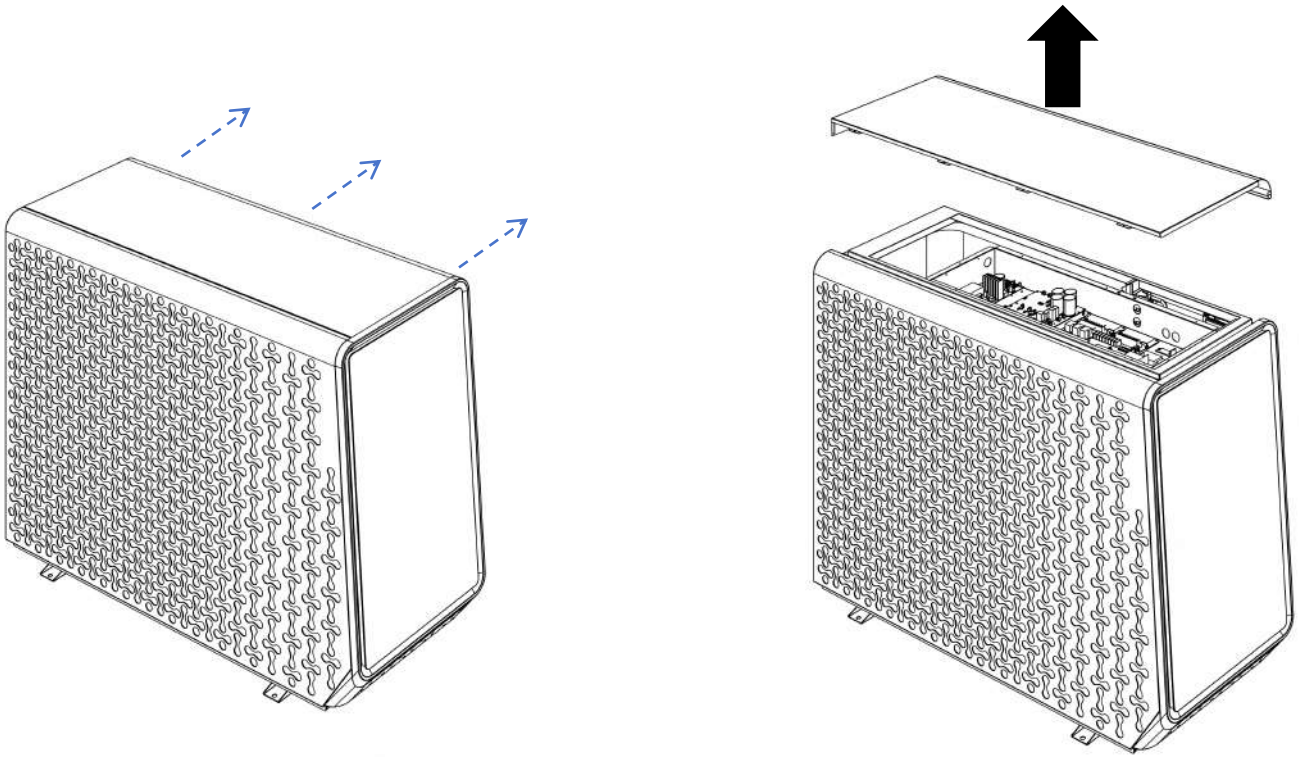

8.2 Precautions for electrical wiring

WARNING
1. The appliance must be installed in accordance with national wiring regulations.
2. Follow the Wiring Diagram for electrical wiring, which is located on the rear side of the electrical box cover.
3. This appliance includes an earth connection solely for functional purposes.
4. Be sure to install the required fuses or circuit breakers (type AC is sufficient). An all-pole disconnection switch with a contact separation of at least 3 mm in all poles must be connected in the fixed wiring.
5. It is prohibited to install emergency stop switches, remote switches used to stop the unit (including circuit breakers, contactors, and relays) within 2 meters of the unit.
6. Establish electrical connections to the fixed wiring.
7. ALWAYS use multi-core cable for power supply cables.

8. If the power supply has a missing or incorrect N-phase, the equipment may malfunction.
9. Ensure proper earthing. Do not earth the unit to a utility pipe, surge absorber, or telephone earth. Inadequate earthing may result in electrical shock.
10. Install the required fuses or circuit breakers.
11. Secure electrical wiring with cable ties to prevent contact with sharp edges or piping, especially on the high-pressure side.
12. Do not use taped wires, stranded conductor wires, extension cords, or star-system connections, as they may cause overheating, electrical shock, or fire.
13. Do not install a phase-advancing capacitor, as this unit is equipped with an inverter. A phase-advancing capacitor will reduce performance and may cause accidents.
14. Rotating fan: Before powering on or servicing the outdoor unit, ensure the discharge grille covers the fan to protect against contact with the rotating fan.
15. If the supply cord is damaged, it must be replaced by the manufacturer, its service agent, or similarly qualified personnel to avoid hazards.
 **CAUTION**
1. Do not push or store excess cable length inside the unit.
2. A main switch or other disconnection device (with contact separation in all poles) must be included in the fixed wiring, in compliance with relevant local laws and regulations.
3. Use only copper wires.
4. Never squeeze bundled cables; keep them away from piping and sharp edges.
5. Ensure no external pressure is applied to the terminal connections.
6. Field wiring must be performed in accordance with the wiring diagram supplied with the unit and the instructions below.
7. Use a dedicated power source, do not share the power source with another appliance.
8. Properly earth the unit, including the wired controller. Do not connect the unit to a utility pipe, surge protector, or telephone earth. Inadequate earthing may result in electrocution..
9. An earth fault circuit interrupter (30 mA) must be installed to prevent electrical shock. Use 3-core shielded wires.
10. Install the required fuses or circuit breakers.
11. A leakage protection switch must be installed on the unit's power supply.
12. Install an earth fault circuit interrupter and fuse on the power supply line.
 **NOTICE**
1. The distance between high-voltage and low-voltage cables must be at least 50 mm.
2. All communication wires, including the unit-to-controller ABXYE line, must be shielded.
3. Use H07RN-F as the power cable. Only the thermistor and wired controller wiring operate at low voltage.
4. Power cables and communication wires must be routed separately and must not be placed in the same conduit, as this may cause electromagnetic interference.
5. Secure electrical wires with cable ties to prevent contact with piping, especially on the high-pressure side.
6. This unit is equipped with an inverter. Installing a phase-advancing capacitor is prohibited, as it will reduce the power factor improvement effect and may cause abnormal heating of the capacitor due to high-frequency waves.
7. The external load current must be less than 0.2 A. If a single load's current exceeds 0.2 A, the load must be controlled via an AC contactor.

8. The expansion valve electric heating tape, plate heat exchanger electric heating tape, and flow switch electric heating tape share the same terminal port.
9. The equipment must be earthed.
10. Any high-voltage external load that is metal or has an earthed port must be earthed.
11. Ensure the earth fault circuit interrupter is compatible with the inverter (resistant to high-frequency electrical noise) to prevent unnecessary activation.
12. Over-tightening may damage screws. Tighten screws with a proper screwdriver; using an improper screwdriver can damage screws and result in incorrect tightening torque.

8.3 Guidelines for connecting electrical wires

Please refer to system diagram below for location of key components and sensors.

The diagram below is for reference only. Actual installations will vary based on unique system configurations.

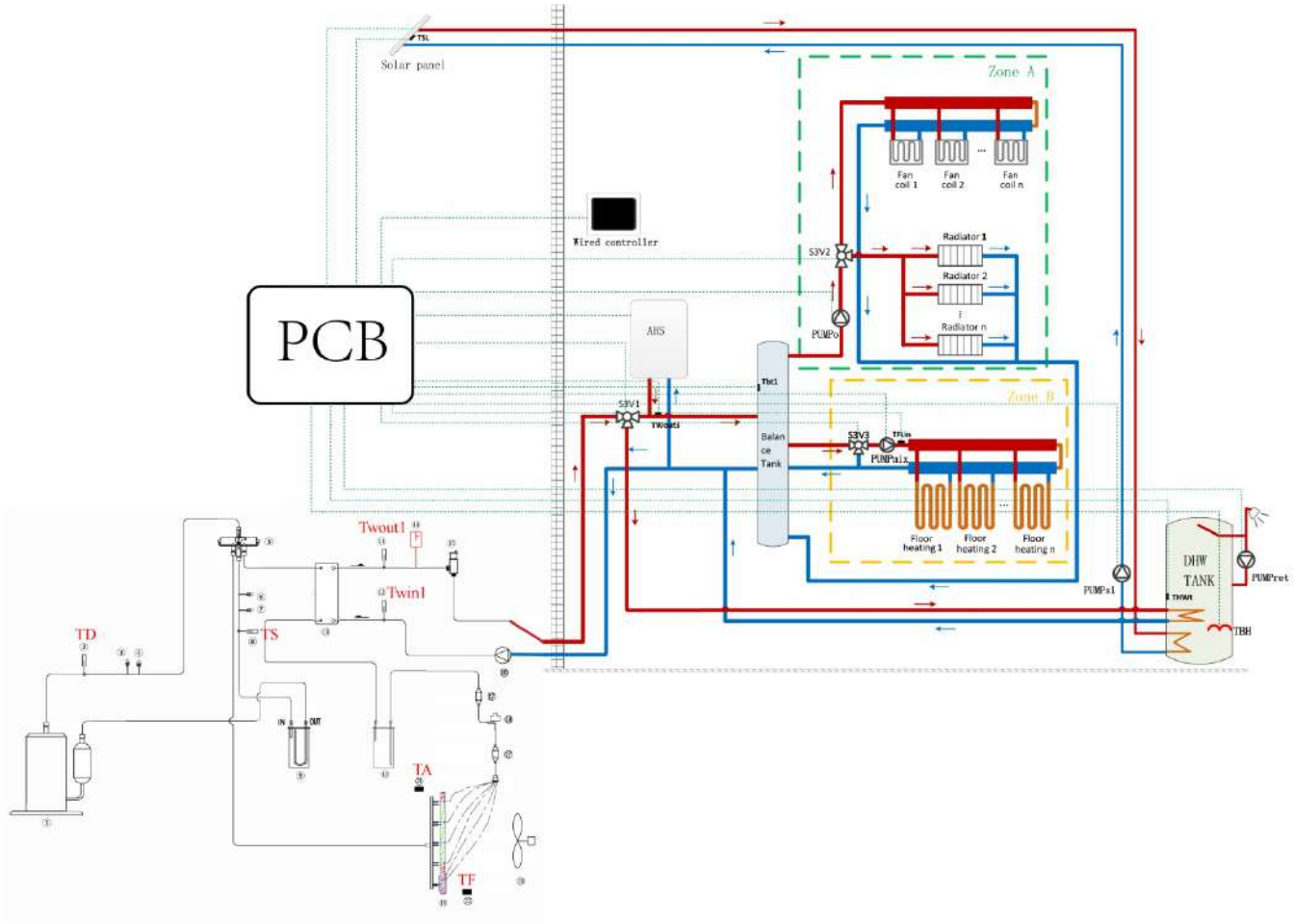

8.3.1 Field wiring guidelines

1. Most field wiring for the unit connects to the terminal block inside the switch box. To access the terminal block, remove the switch box service panel.
2. Secure all cables using cable ties.
3. The backup heater requires a dedicated power circuit.
4. For installations equipped with a user-supplied domestic hot water tank, the booster heater requires a dedicated power circuit.
5. Please refer to the Installation & Owner's Manual of the domestic hot water tank. Secure the wiring in the order specified below.
6. Route the electrical wires such that the front cover does not lift during wiring, and attach the front cover securely. Install the wires and fasten the cover firmly to ensure a proper fit.

8.3.2 Circuit protector selection

1. Select the minimum required wire diameter for each unit individually based on Table 8-1 and Table 8-2. The rated current in Table 8-1 corresponds to the MCA (Minimum Circuit Ampacity) in Table 8-2. If the MCA exceeds 63 A, wire diameters must be selected in accordance with local wiring regulations.

2. The maximum allowable voltage deviation between phases is 2%.

3. Select circuit breakers with a contact separation of at least 3 mm in all poles to ensure full disconnection. MFA (Maximum Fuse Amperage) is used to select current circuit breakers and residual current operation breakers. The inverter PCB is equipped with an overcurrent protector (fuse); if additional overcurrent protectors are required, refer to the TOCA (Total Overcurrent Protection Amperage) in Table 8-2.

Table 8-1

Rated current (A)	Nominal cross-sectional area (mm)	
	Flexible cord	Cable for fixed wiring
≤3	0.5 and 0.75	1 and 2.5
>3 and ≤6	0.75 and 1	1 and 2.5
>6 and ≤10	1 and 1.5	1 and 2.5
>10 and ≤16	1.5 and 2.5	1.5 and 4
>16 and ≤25	2.5 and 4	2.5 and 6
>25 and ≤32	4 and 6	4 and 10
>32 and ≤50	6 and 10	6 and 16
>50 and ≤63	10 and 16	10 and 25

Table 8-2

System	Outdoor unit				Power current		
	Voltage(V)	Hz	Min.(V)	Max.(V)	MCA(A)	TOCA(A)	MFA(A)
iGXC08	220-240	50	198	264	17	18.5	20
iGXC11	220-240	50	198	264	20.5	24	25
iGXC13	220-240	50	198	264	23.5	24	25
iGXC11T	380-415	50	342	456	10	12	16
iGXC13T	380-415	50	342	456	11	12	16
iGXC16T	380-415	50	342	456	12	14	16

MCA: min. circuit current. (A)

TOCA: total over current (A)

MFA: max. fuse current (A)

8.3.3 Tightening torque

Item	Tightening torque (N•m)
M4 (power terminal, electric control board terminal)	1.2 to 1.4
M4 (earthing）	1.2 to 1.4

8.3.4 Back plate layout for connection

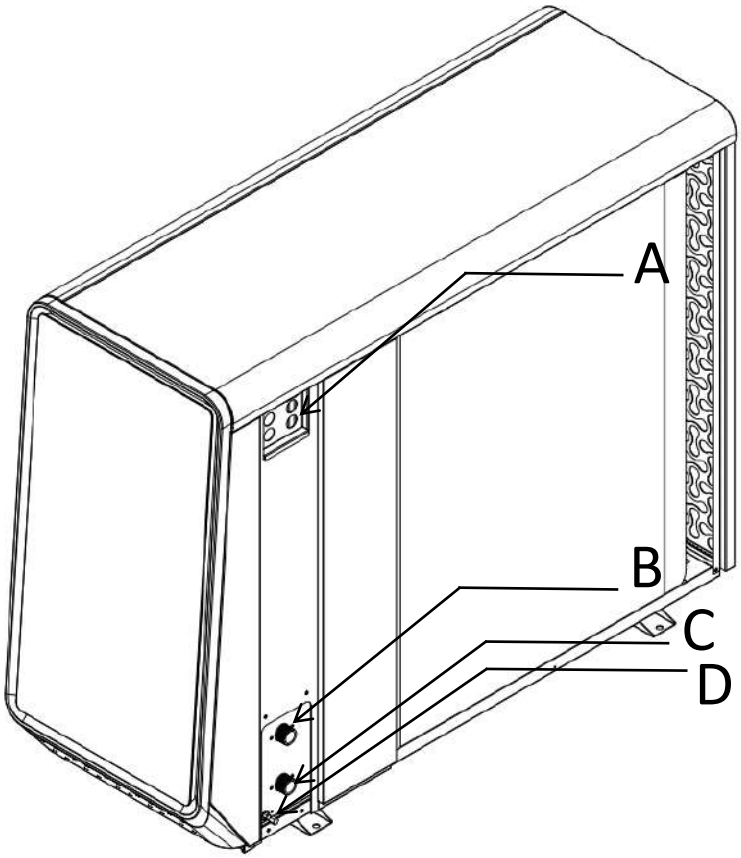

A **Wiring hole**
B **Outlet water**
C **Inlet water**
D **Drainage**

8.4 Connection with power supply

8.4.1 Precautions

For connecting the unit to a power supply terminal, use a circular wiring terminal with an insulated casing (see Figure 7.1).

If such a circular wiring terminal cannot be used, follow these instructions:

- Use a power cord meeting the specified requirements and connect it firmly. Apply the appropriate tightening torque specified in the "Tightening torques" section above to prevent the cord from being accidentally pulled out by external force.
- Do not connect two power cords of different diameters to the same power supply terminal. This could lead to loose wiring, causing the wires to overheat (see Figure 7.2).

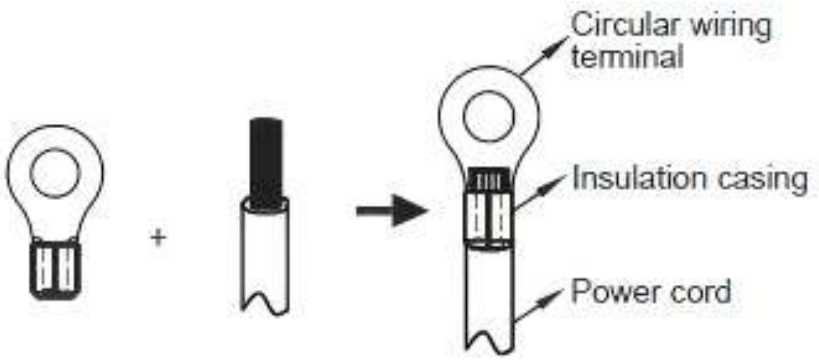

Figure 7.1

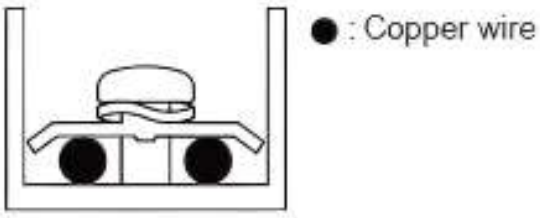

Proper power wiring connections

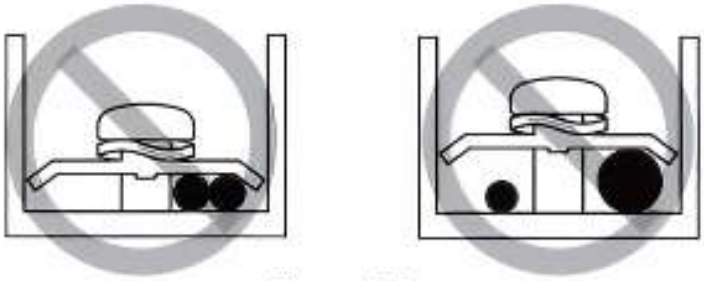

Figure 7.2

8.4.2 Wiring of main power supply

a. For power supply: 230V 50Hz

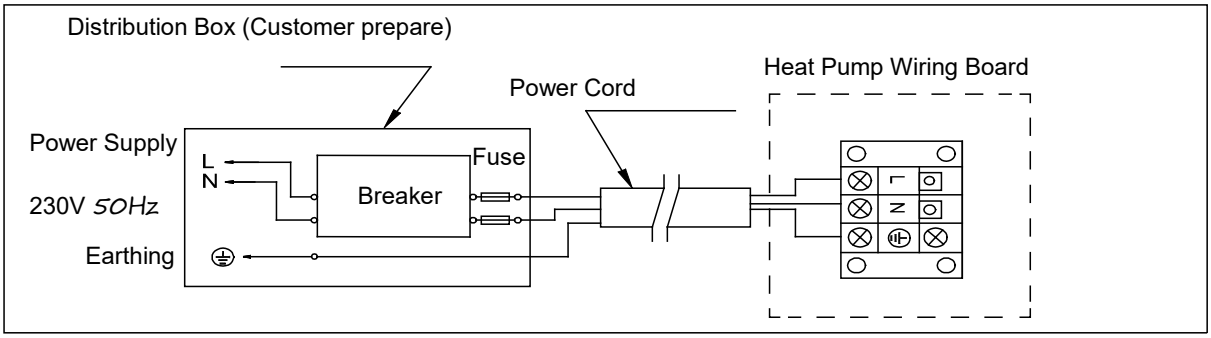

b. For power supply: 400V 50Hz

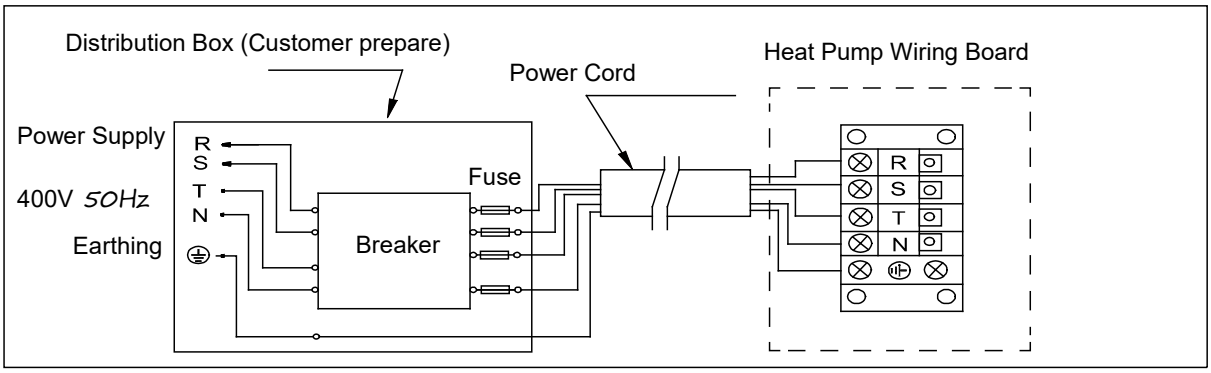

Note:

1. The disconnection incorporated in the fixed wiring shall be in accordance with AS/NZS 3000 Electrical installations shall be provided with devices to prevent or remove hazards associated with the electrical installation and for maintenance of electrically activated equipment. Electrical installations shall include all switching devices or other means of disconnection necessary to enable operations, repairs and maintenance work to be carried out with safety.
2. Supply cords of parts of appliances for outdoor use shall not be lighter than polychloroprene sheathed flexible cord (code designation 60245 IEC 57).

8.5 Installation of wired controller

CAUTION
1. The general wiring instructions in previous chapters must be followed.
2. The wired controller must be installed indoors and protected from direct sunlight.
3. Ensure the wired controller is kept away from ignition sources, flammable gases, oil, water vapor, and sulfide gases.
4. To prevent electromagnetic interference, maintain a proper distance between the wired controller and electrical appliances (e.g., lamps).
5. The remote wired controller operates on a low-voltage circuit. Never connect it to a standard 220 V/380 V circuit, nor place it in the same wiring tube as such a circuit.
6. If signal wire extension is needed, use a terminal connection block.
7. Do not use a megger to test the insulation of the signal wire after connection is completed.

8.5.1 Materials and requirements for installing the wire controller

No.	Name	Qty	Remarks
1	Wired controller	1	/
2	Screws	2	/
3	Wall-mounted panel	1	86mm*88mm

1. Install at a height of 1 to 1.5 meters from the floor.
2. Mount vertically on the wall.
3. Avoid installation in the following locations:
- Near windows or other areas exposed to direct sunlight or direct airflow.
- In shaded areas or behind objects that disrupt the room's airflow.
- Locations prone to condensation.
- Near heat sources.
- On uneven surfaces.

8.5.2 Dimensions

Unit: mm

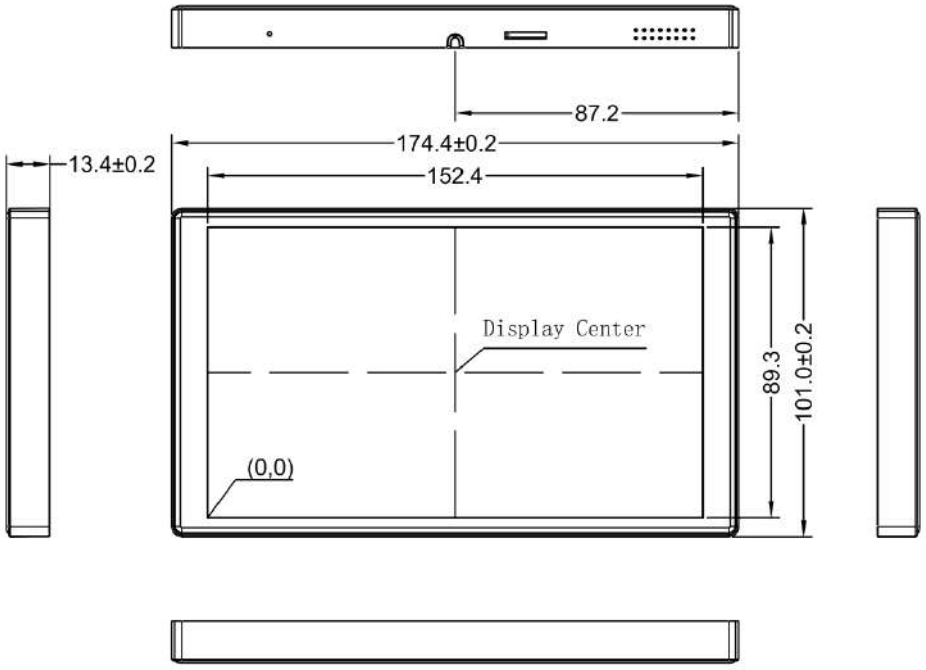

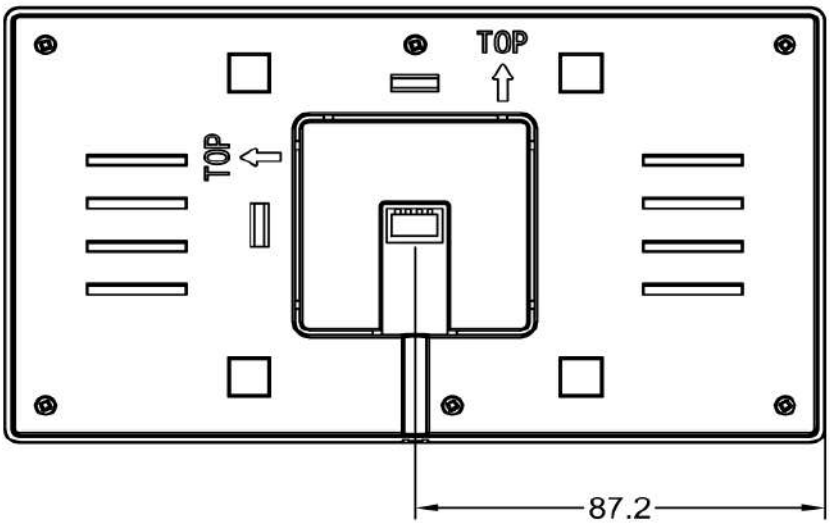

8.5.3 Wired controller installation and connection

1. Drilling into the wall:

Press the wall panel firmly against the wall surface. Drill holes along the positioning center points and insert M4-compatible expansion anchors.

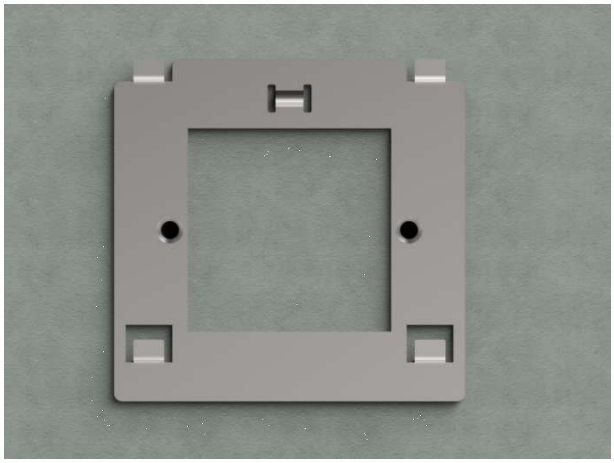

2. Wall Panel Installation:

Screw two M4 screws into the wall holes along the wall to secure the mounting bracket.



3. Secure the cable:

Cut the notch in the plastic housing and thread the cable through.



4.Installing the display:

Note: Installation can be adjusted based on the actual usage direction.



5. Connection:

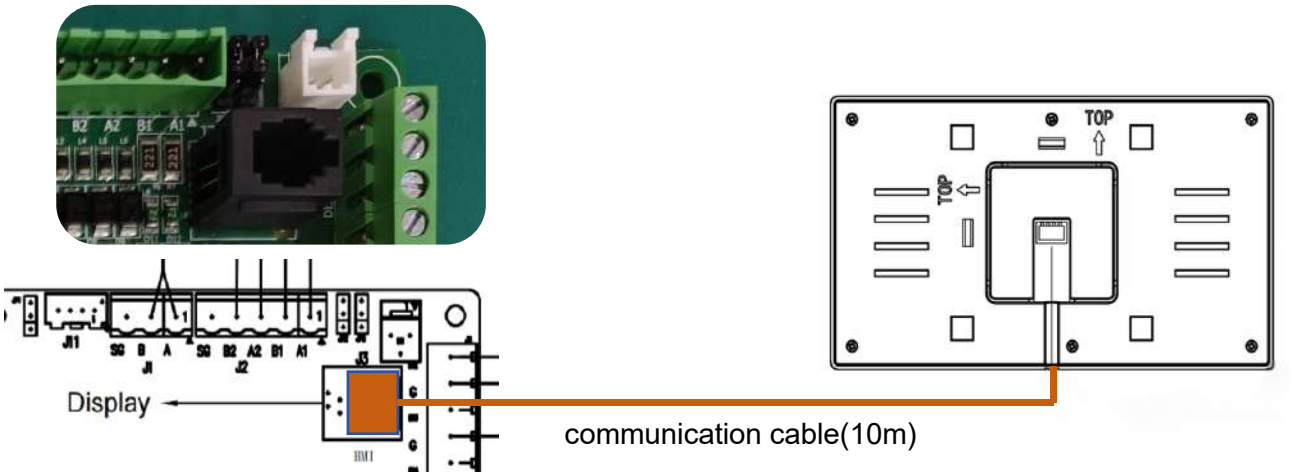

Expansion PCB

Note: The communication cable installed between the room controller and heat pump shall be routed inside a conduit.

Specification of Communication cable:

Input voltage	12V
Wire size	0.95mm
Wire length	10m
Waterproof rating	IPX4

8.6 Connection of other components

Customers can connect different auxiliary devices according to their needs, based on the circuit diagram shown in the figure

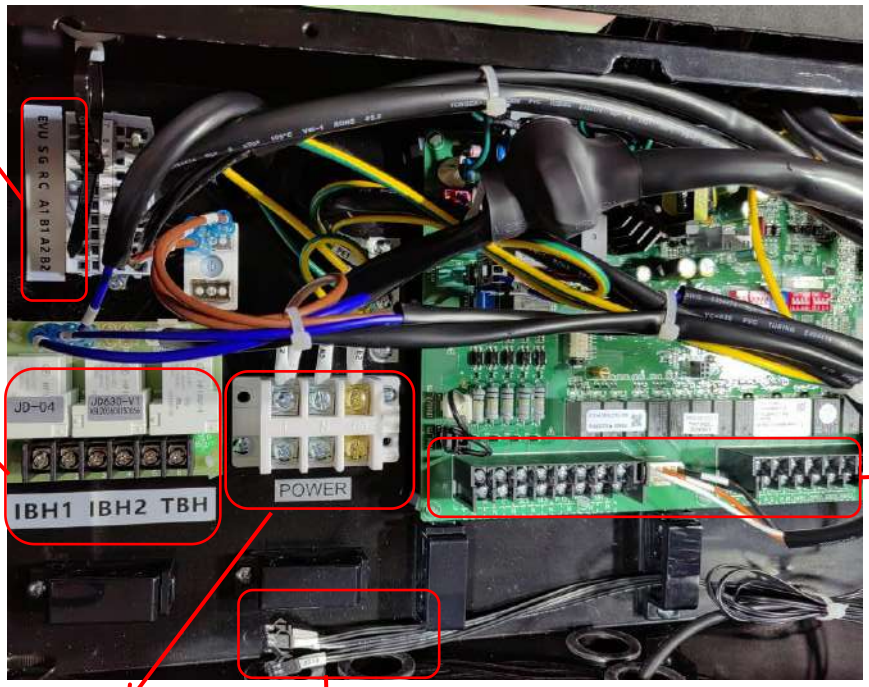

For communication port:

EVU,SG: SG READY port

R,C: Remote control port

A1,B1: Cascade

A2,B2: BMS

For the temperature Sensor:

AI5A means Bottom Temp. of BT (Tbt2; Disable in default)

AI5B means Top Temp. of BT(Tbt1)

AI5C means DHW tank temp(THWt)

AI5D means 0utlet temp.of whole system (Twout3; Disable in default)

AI5E means Inlet temp. of FH (TFLin; Disable in default)

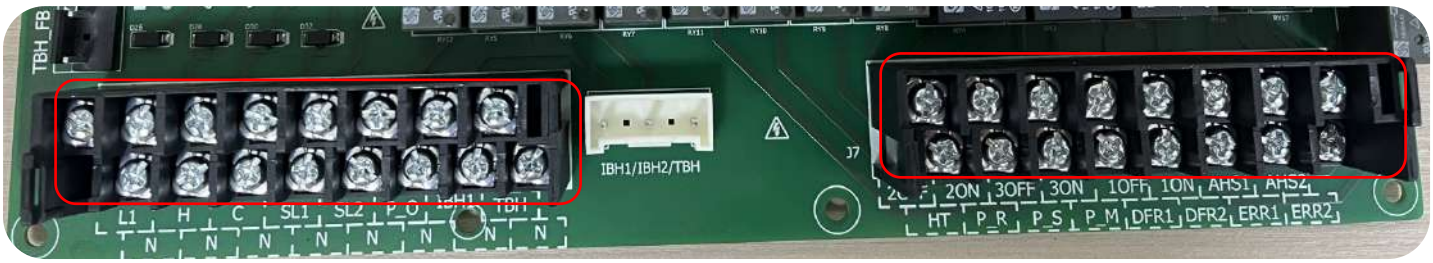

L1 H:Thermostat Signal H

L1 C:Thermostat Signal C

P_O N:Secondary Circulation Pump

SL1 SL2:Solar water heater

IBH1:Electric heat1

IBH2:Electric heat2

TBH:DHW tank heater

2OFF/2ON N:Cooling 3 way valve

3OFF/3ON N: Mixing 3 way valve

1OFF/1ON N:DHW 3 way valve

AHS1 AHS2:Auxiliary heat source

HT N:Anti-freeze heater

P_R N:DHW water pump(Return water pump)

P_M N:Mixing water pump

P_S N:Solar water pump

DFR1 DFR2:Defrost signal

ERR1 ERR2:Error signal

Note: For the description of port voltage, please refer to 14.2.

Wiring Diagram for Engineering Terminal Blocks (J7, J9)

Digital Output (Relay Output)

Return water pump	Solar water pump	Mixing water pump	Secondary water pump	Electric heater1/2	DHW heater1/2	Three-way valve
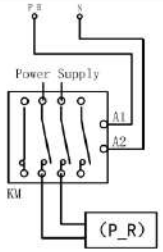	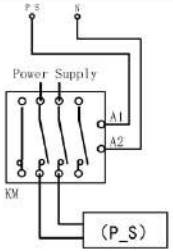	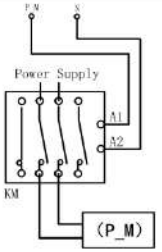	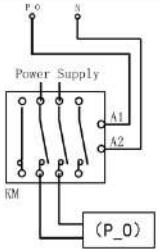	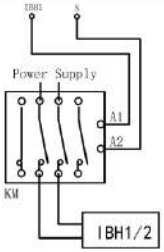	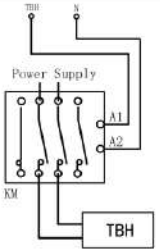	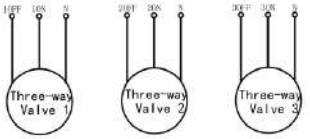

Auxiliary heat source	Defrost signal	Error signal	Anti-Freeze Heater
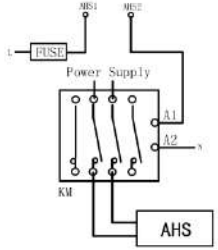	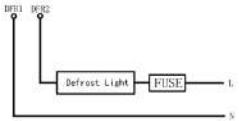	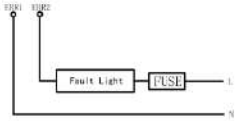	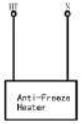

Note: The output power of a single relay must not exceed 400 W, and the total output power of all relays must not exceed 800 W; otherwise, an external contactor is required

High-Voltage Digital Inputs

Thermostat (Single-Zone Mode)	Thermostat (Single-Zone Switch)	Thermostat (Dual-Zone Switch)	Solar Signals (SL1, SL2)
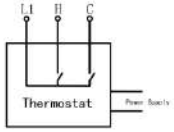	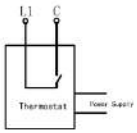	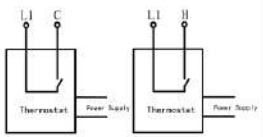	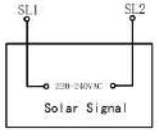
Note: Bridging L1-H (L1-C) indicates that the thermostat is closed.	Note: Bridging L1-C indicates thatthe thermostat is closed.	Note: Bridging L1-H (L1-C) indicates thatthe thermostat is closed.	Note: Supply 220 - 240 VAC to terminals SL1 and SL2.

* Please refer to wiring diagram for more information.

8.6.1 Wiring of additional heating source control (AHS)

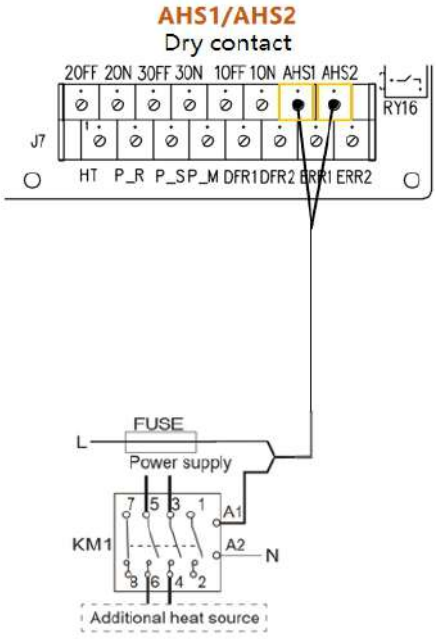

L-N Voltage	220-240 V AC
Maximum running current (A)	0.2
Minimum wire size (mm2)	0.75
Control port signal type	Dry contactor without voltage

8.6.2 Wiring of 3-way valves S3V1, S3V2 and S3V3

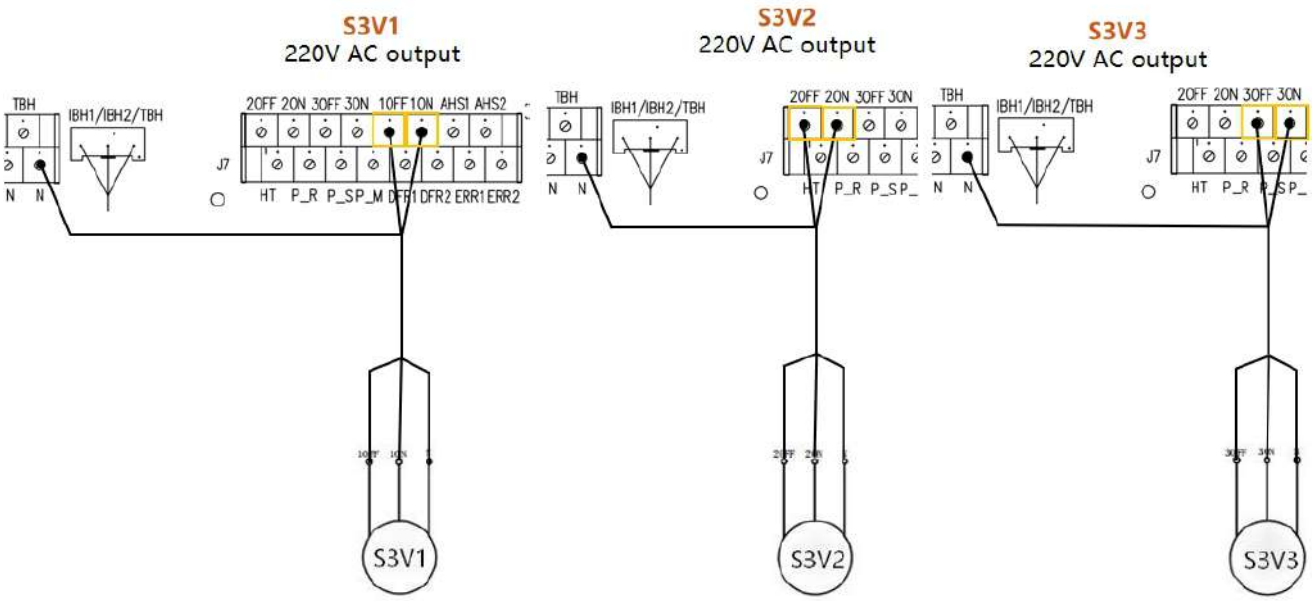

The illustration below is for this type of three way valve:

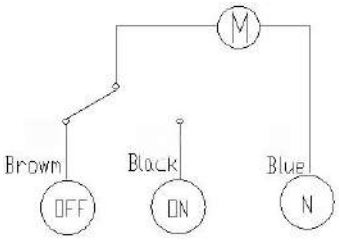

Voltage	220-240 V AC
Maximum running current (A)	0.2
Minimum wire size (mm2)	0.75
Control port signal type	the port provides the signal with 220-240 V~50 Hz voltage

8.6.3 Wiring of additional pumps

Secondary circulation pump PUMPo (P_O):

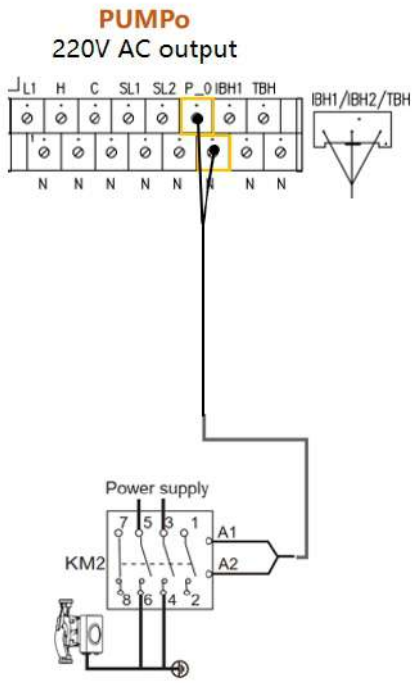

Mixing pump PUMPmix (P_M):

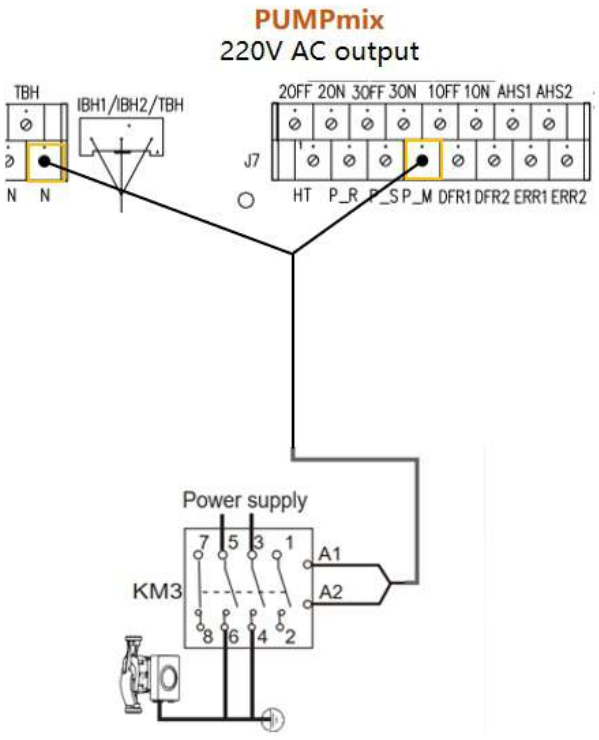

Solar water pump PUMPsl (P_S):

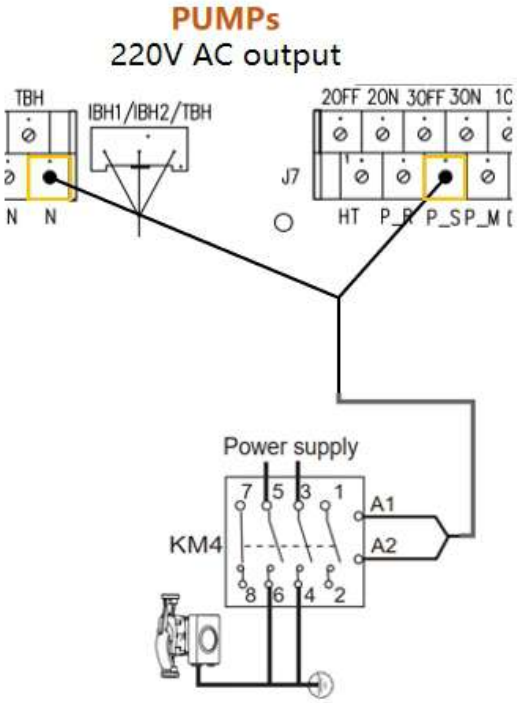

Domestic hot water pump PUMPd (P_R):

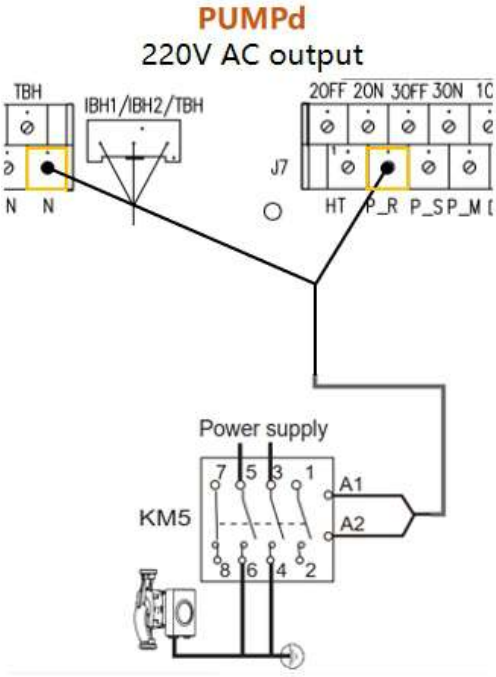

Voltage	220-240 V AC
Maximum running current (A)	0.2
Minimum wire size (mm2)	0.75
Control port signal type	the port provides the signal with 220-240 V~50 Hz voltage

8.6.4 Wiring of error signal and defrost signal

Error signal ERR1, ERR2 and Defrost signal DFR1, DFR2

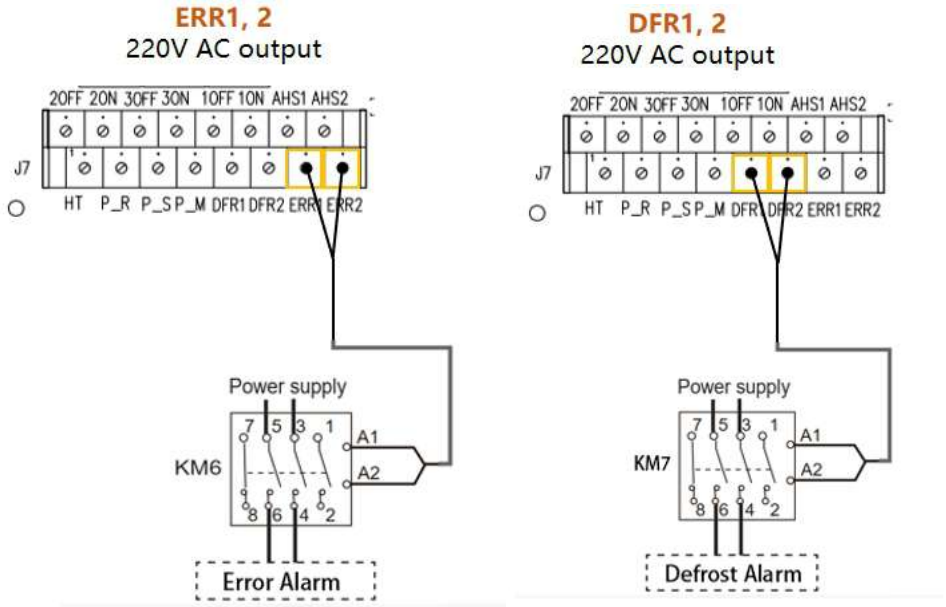

Voltage	220-240 V AC
Maximum running current (A)	0.2
Minimum wire size (mm2)	0.75
Control port signal type	the port provides the signal with 220-240 V~50 Hz voltage

8.6.5 Wiring of TBH and IBH

Wiring of tank booster heater(TBH) and IBH

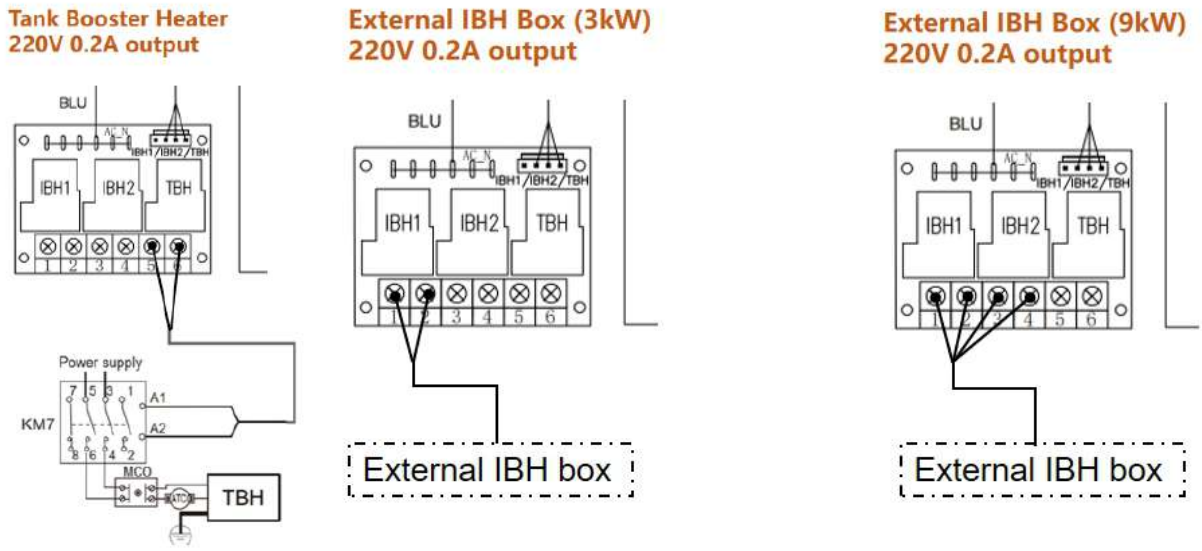

Voltage	220-240 V AC
Maximum running current (A)	0.2
Minimum wire size (mm2)	0.75
Control port signal type	the port provides the signal with 220-240 V~50 Hz voltage

8.7 Cascade wiring and dip switch

When used in cascade:

(1) First, use the SW3 dip-switch on the expansion board to set the addresses sequentially as 0#,1#, and 2#—where 0# is the master device, and 1# and 2# are slave devices.

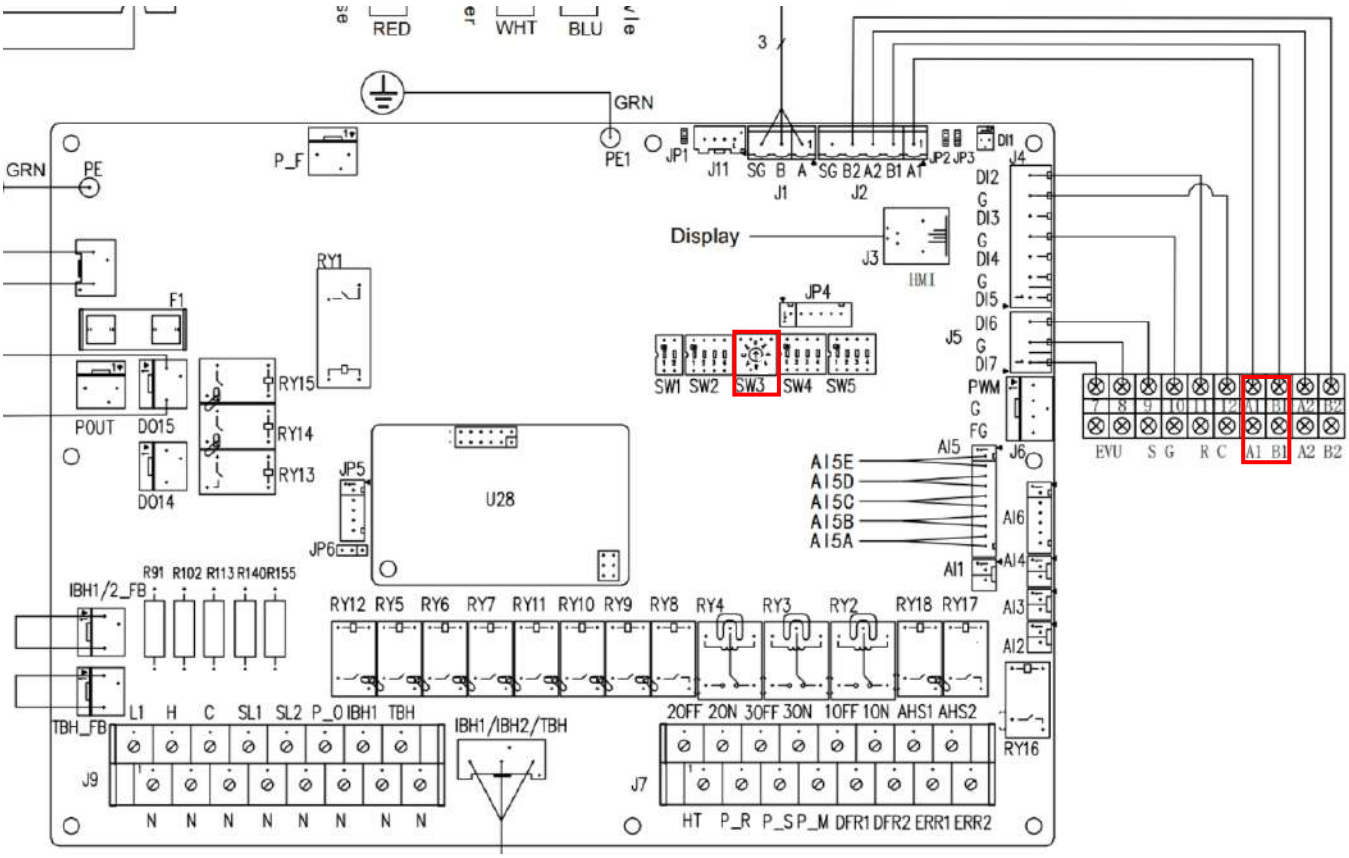

(2) The A1 and B1 ports of the expansion boards for Units 0#,1#, and 2# must be connected in series, as shown in the figure below.

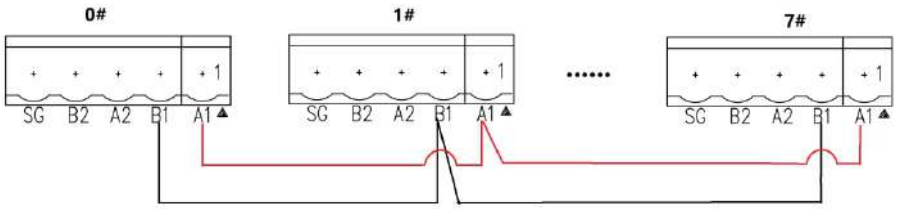

(3) The M+ series supports up to 8 units connected in cascade.

9 Display Operation Guide

Menu Structure

1 Status Query	**1 Status Query**	**8 Force Open**
2 Display Setting	1.1 Input	8.1 Floor Heat Dry
3 Time and Date	1.2 Output	8.2 Force ON TBH
4 Timer	1.3 Version	8.3 Force ON DHW
5 WIFI Setting	**2 Display Setting**	**9 Holiday Mode Setting**
6 User Parameters	2.1 Language	9.1 Holiday Away
7 Manual Defrost	2.2 Brightness	9.2 Holiday Home
8 Force Open	2.3 Screen Lock Setting	**10 Advanced Setting**
9 Holiday Mode Set	2.4 No Operation Screen Lock Time	10.1 Admin. Setting
10 Advanced Setting	2.5 Screensaver	10.2 Maintain. Setting
11 Energy Consumption Metering	2.6 Key Sound	10.3 Project Setting
12 Error	2.7 Alarm Sound	10.4 User Setting
13 Zone Setting	2.8 Unit	10.5 Distributor
	2.9 Network Time Synchronization	
	2.10 Temp.CMPST.	
	3 Time and Date	**11 Energy Consumption Metering**
	3.1 System Time Setting	11.1 The last 24 hours
	4 Timer	11.2 The last 30 days
	4.1 Timer on/off	11.3 The last 12 months
	4.2 Disinfection Timer	11.4 The last 10 years
	4.3 Silent Timer	**12 Error**
	4.4 DHW Pump Timer	12.1 Current Error
	5 WIFI Setting	12.2 History Error
	5.1 Connect WIFI	
	6 User Parameters	
	6.1 User Parameters Setting	
	7 Manual Defrost	
	7.1 Manual Defrost Setting	

1 Status Query

Used to check unit status parameters such as temperature, switch status, etc.

2 Display Setting

Settings related to the controller, such as brightness, language, etc.

3 Time and Date

Used to adjust the system time

4 Timer

Used to activate timer functions, such as power on/off timers, silent operation timers

5 WIFI Setting

Used for the controller to connect to WiFi

6 User Parameters

View and modify user-defined settings

7 Manual Defrost

Used to activate manual defrosting

8 Force Open

Rapid heating switch, e.g., instantly activating electric heating for the water tank

9 Holi.Mode Set

Settings related to holiday mode

10 Advanced Setting

Used for advanced parameter configuration; generally not recommended for modification

11 ECM

Used for viewing energy consumption data

12 Error

Used to query unit fault information, including current and historical

13 Zone setting

Used to set the status and targeted temperature for dual zones.

9.1 Main Interface

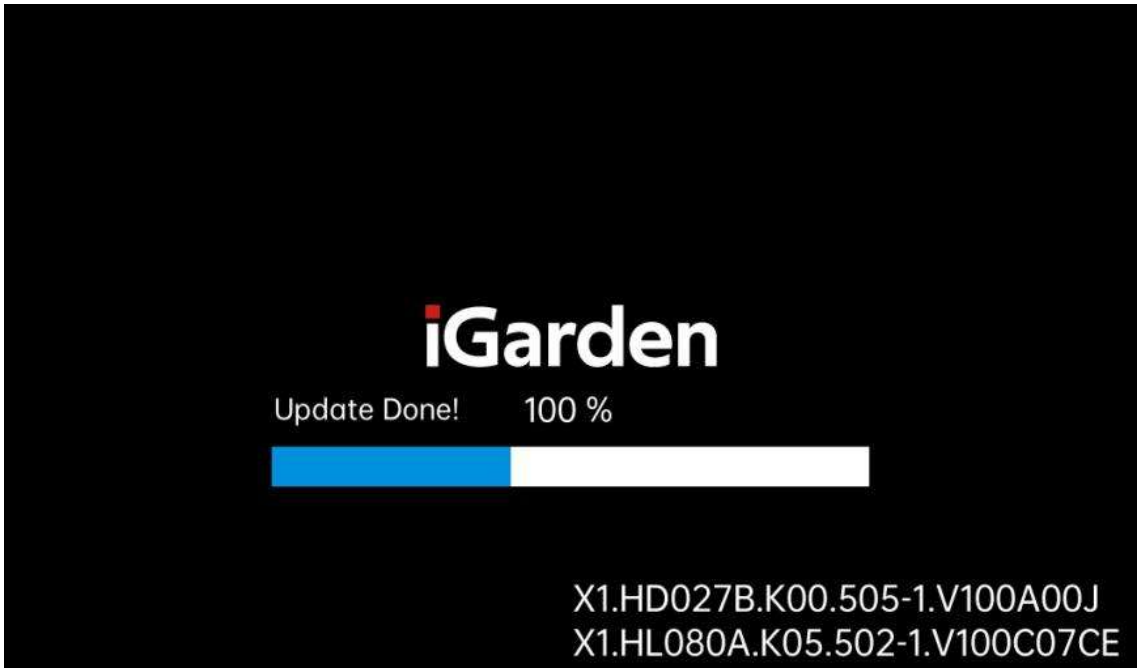



No.	Meaning	Description
①	Menu	After clicking this button, the unit will enter the function menu interface, where you can configure various custom modes.
②	Mode setting	After clicking this button, you can configure the unit mode settings. There are three modes available:

		Heating, Cooling, and Auto.
③	Power consumption	The number indicates real-time power consumption, while the bar chart shows hourly power consumption for the current day. If power consumption is not enabled, the main screen will not show.
④	Screen lock	After locking, the display cannot be operated; Press the button again to unlock the screen.
⑤	Operating strategy	After clicking this button, you can select the unit's operating strategy. There are three strategies available: Turbo, Standard, Silent and Auto.
⑥	100% Green enable button	After clicking this button, the unit will operate in conjunction with the solar inverter device. **Note:** This function requires the installation of iGarden's Inverter to be enabled.
⑦	DHW setting	Upper shows the target DHW temperature. You can slide the ring to set the target temperature or click the target temperature to set it. Lower shows the actual temperature of the hot water tank.
⑧	DHW switch	You can turn the DHW function on or off.
⑨	Fault icon	When a fault occurs, this icon will appear. Clicking it will take you to the fault log interface for viewing.
⑩	WiFi icon	It indicates the current network settings status. Clicking this icon to access the network settings interface.
⑪	SG Ready icon	When the SG Ready function is enabled, this icon will be illuminated, otherwise, it will be dim.
⑫	Defrosting icon	When the Defrosting is enabled, this icon will be illuminated, click can enable the forced defrost.
⑬	Anti-freeze icon	This icon appears when the unit enters anti-freeze mode.
⑭	System time	Shows the date and time. The network time will sync automatically after connecting to Wi-Fi
⑮	100% Green icon	When the 100% Green function is enabled, this icon will be illuminated. Click the icon to access the green power settings
⑯	Ambient temp.	It shows the current ambient temperature.
⑰	Electric heater	When the Electric heater is enabled, this icon will be illuminated, otherwise, it will be dim. Click the icon to access the forced opening settings
⑱	Operating strategy icon	It shows the current Operating strategy
⑲	Timer on/off icon	When the Timer function is enabled, this icon will be illuminated. Click this icon to access the timer settings interface.
⑳	Heating/Cooling On/Off	You can turn the cooling/heating on or off.
㉑	Cooling/Heating Temperature Setting	It will show the current cooling/heating target temperature. Slide the ring to set the target temperature. You can also set the target temperature by tapping it; after tapping, the device will enter the target temperature setting interface. Current Temperature: shows the current temperature.

9.1.1 ON/OFF

Click the ON/OFF switch button corresponding to each zone on the main interface to enable/disable cooling, heating, or hot water for that zone.



9.1.2 Adjusting Temperature

Slide the ring to set the target temperature. You can also set the target temperature by tapping it; After tapping, the device will enter the target temperature setting interface

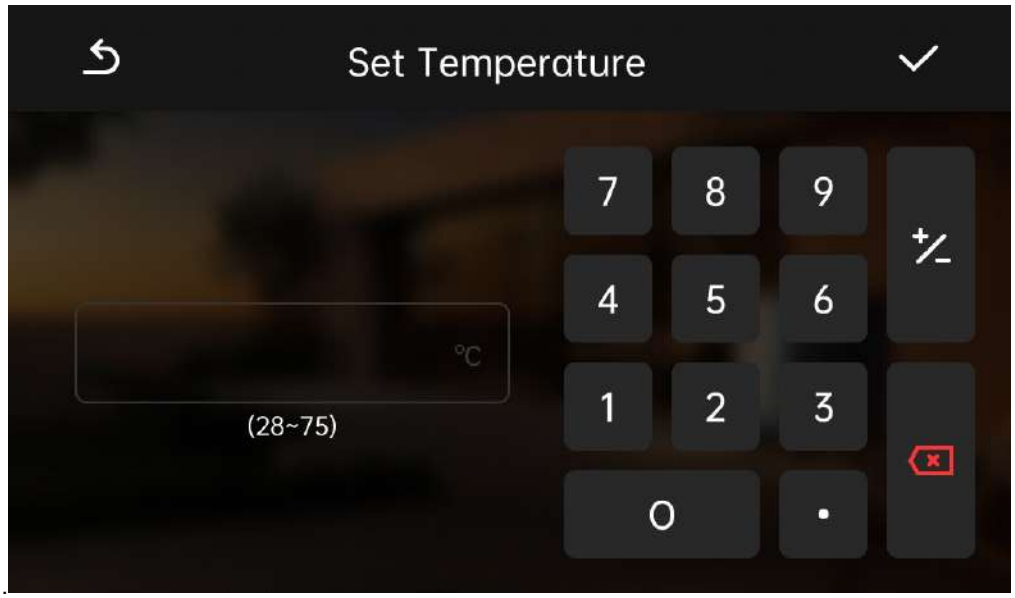

Enter the setting temperature directly, then click the checkmark to save the adjusted temperature value.

9.1.3 Air conditioning mode settings

There are three air conditioning modes: 1. Cooling mode, 2. Heating mode, 3. Auto mode.Click  on the main interface to open the air conditioning mode settings, as shown:



Click the mode you want to set.

9.1.4 Screen unlock

If the lock screen icon appears, the display will not be operable, as shown in the picture:



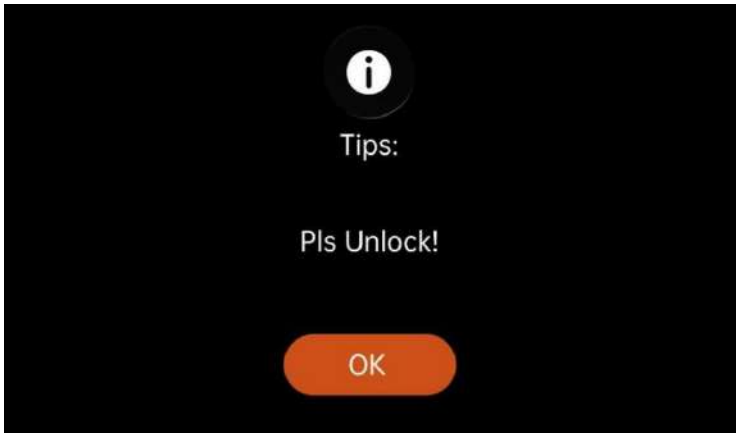

Long-press the lock screen icon again, and it will disappear, showing the main interface. The display can be operated again.

9.1.5 Power Mode Settings

There are four power modes: 1. Standard Mode, 2. Turbo Mode, 3. Silent Mode, 4. Auto Mode. Click the power mode settings will show on the main interface, as shown:



Click the mode you want to set.

9.2 Main menu

Click the Menu button  to enter the main interface.



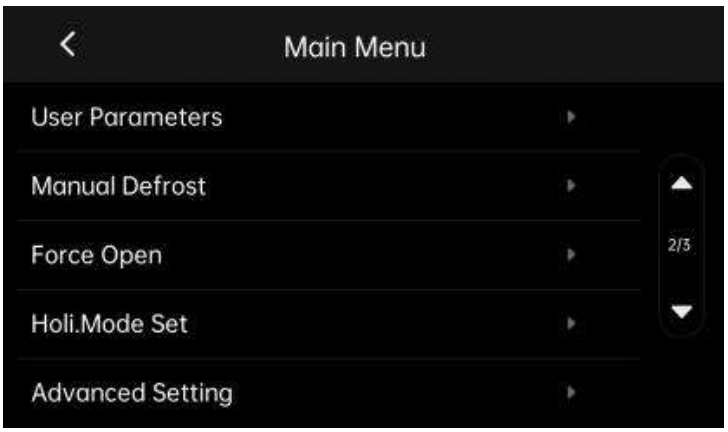



Query Menu

The Query Menu contains three interfaces:

① Analog Input Query Interface

② Load Output Query Interface

③ Program Version Query Interface

9.2.1 Analog Input Query Interface

This interface can be accessed to view the unit's current information (such as temperature, active electrical components, etc.).

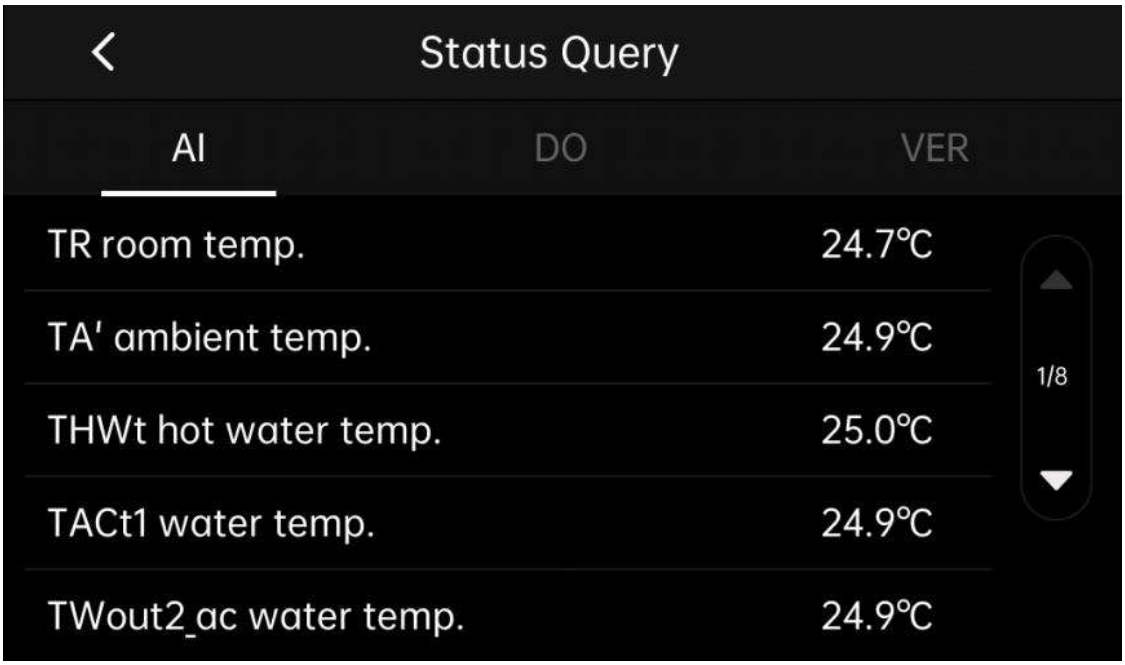

9.2.2 Load Output Query Interface

On the output interface, you can view the output status of each load component. When the corresponding button icon illuminates, it indicates that the component is active.

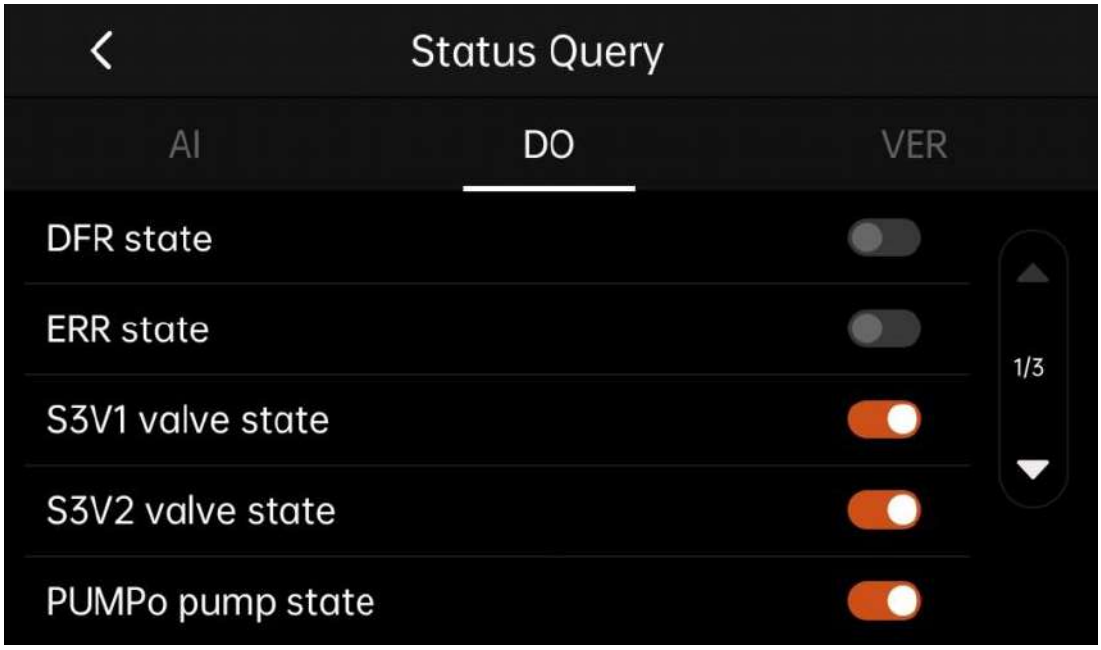

9.2.3 Program Version Query Interface

When handling certain after-sales issues, providing the software information used by the unit controller may be necessary to facilitate better troubleshooting. This information can be found by accessing the version query interface.

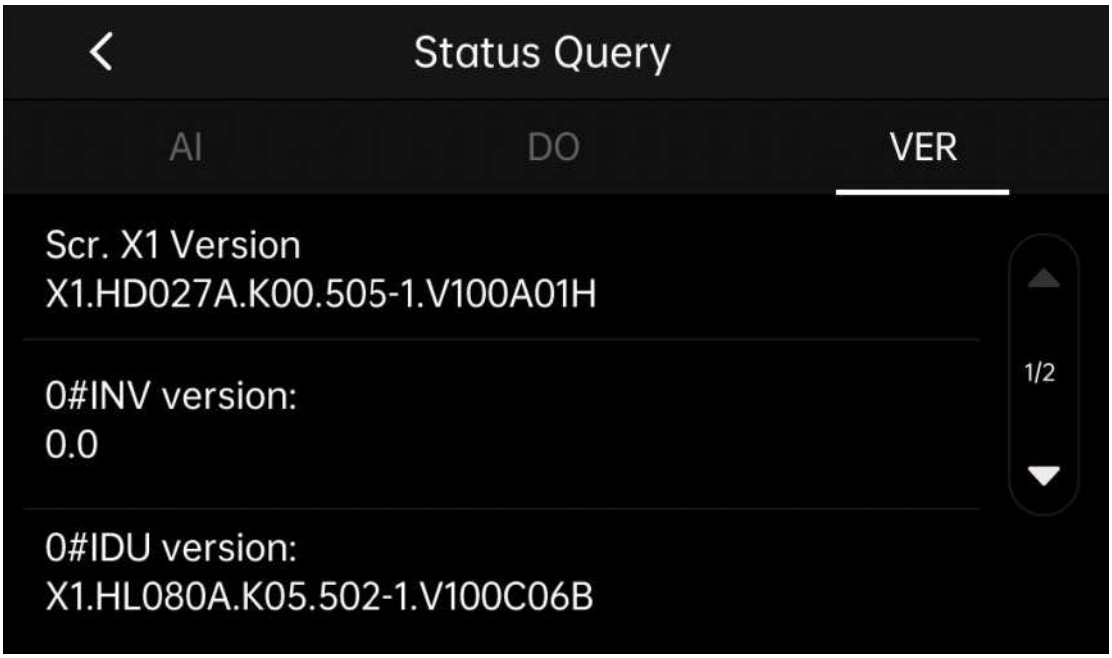

9.3 Display Setting

Display settings allow you to configure everyday preferences such as language, screen brightness, lock screen functionality, and keypad sounds.





9.3.1 Language Setting

Users can select the language as they need.

9.3.2 Brightness setting

This display offers three brightness levels: high, medium, and low. Users can select the appropriate brightness based on their usage environment and personal preferences.

9.3.3 Screen saver

The display will enter screen saver mode after a period of inactivity. The duration before entering screen saver mode can be customized according to user preferences.

When the display is in screen saver mode, simply click the screen to resume normal operation.

Note: Setting the "Screen Saver Time" to 0 disables the screen saver function, keeping the screen constantly on.

9.3.4 Alarm Sound Setting

Users may configure whether an alarm sound is generated when faults occur, based on their specific needs. The following four modes are available:



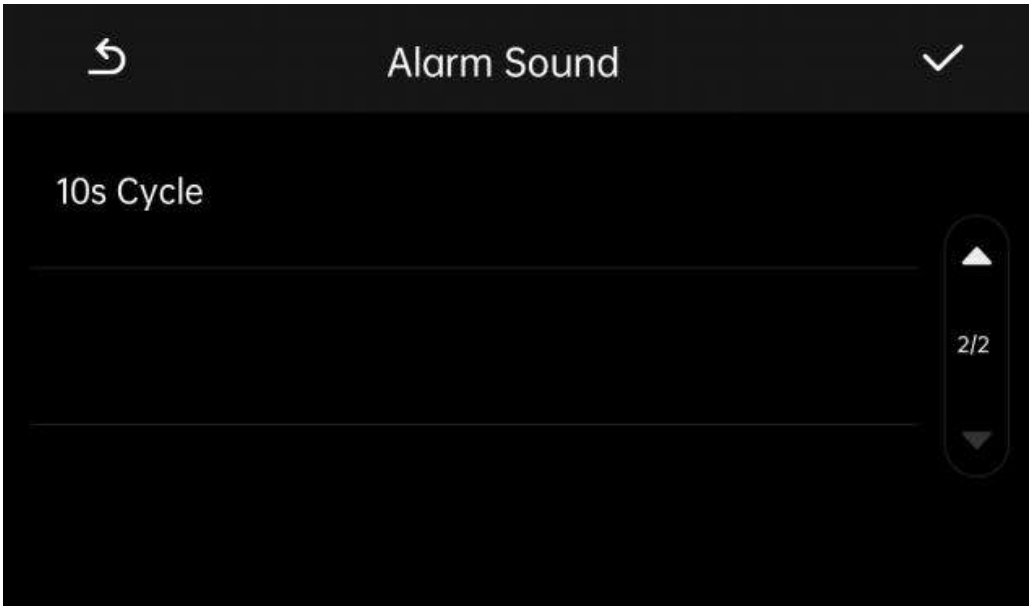

① Continuous Sound: The alarm will sound continuously until the fault query interface is accessed and the fault is cleared.

② No Sound: No corresponding alarm sound will be generated when a fault alarm occurs.

③ Ten-Second Sound: When a fault alarm occurs, the alarm sound will ring for ten seconds and then stop.

④ Ten-Second Cycle: When a fault alarm occurs, the alarm sound will sound for ten seconds and then stop. If the fault remains unresolved after thirty minutes, the alarm sound will sound again for ten seconds and then stop, repeating this cycle until all faults are resolved.

9.3.5 Keypad buzzer

In the display settings interface, you can enable or disable the "Keypad Buzzer" to control the audio feedback for this display's operations.

Enable Keypad Buzzer: Provides audible feedback during touch operations.

Disable Keypad Buzzer: No audible feedback during touch operations.

9.4 Time and Date

The date and time shown at the top of the main interface will synchronize with the network. If they do not match the actual date and time, you will need to manually adjust and calibrate them.

As shown in the image below:

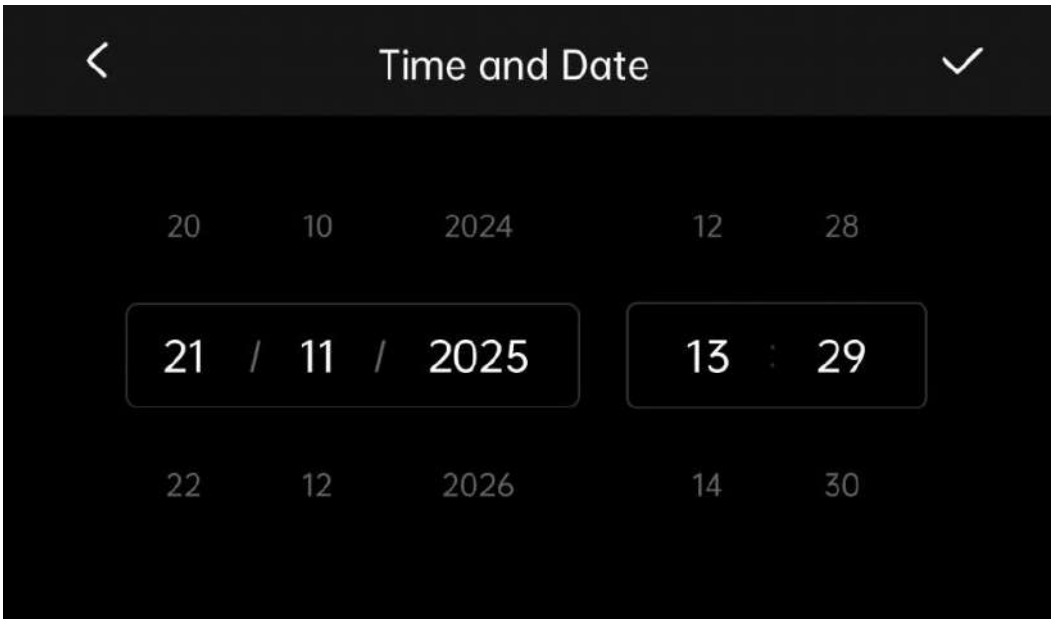

9.5 Timer setting

The Timer Settings interface offers four functions: Timer Power On/Off, Disinfection Timer, Silent Timer, and DHW Pump Timer, as shown below:



9.5.1 Timer on/off

Click to enter the Timer On/Off menu, where you'll find three options: Daily Timer, Weekly Timer, and Cancel Timer. You can also switch between Zone A, Zone B, and the hot water system to set different schedules for each zone.



Daily Timer

Select "Daily Timer" to enter the daily timer settings interface. Within this interface, you can configure multiple timer schedules. Each schedule allows you to set its execution time, operating mode, and operating temperature independently. By turning the corresponding number on the left on or off, you can enable or disable that specific schedule.

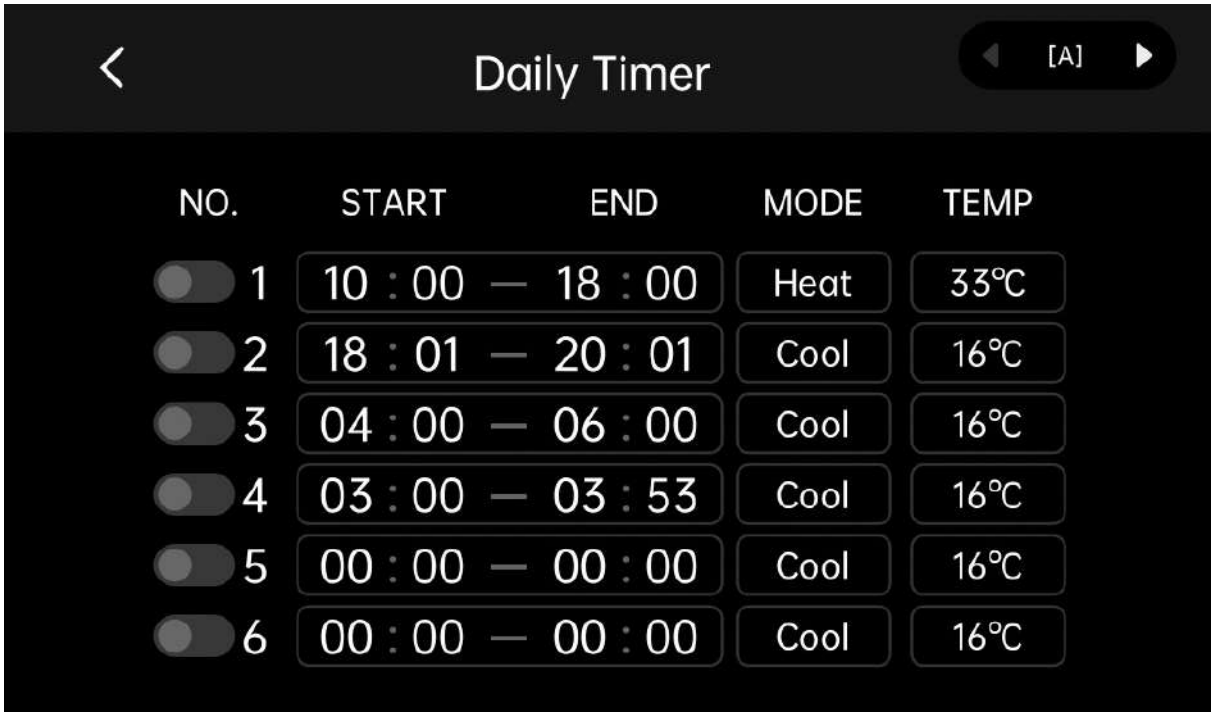

Example: Set the timer according to the following five groups in the table.

No.	Start Time	End Time	Mode	Set Temp.
1	1：00	6：00	DHW	50℃
2	7：00	9：00	Heating	30℃
3	11：00	13：00	Cooling	20℃
4	16：00	19：00	Cooling	20℃
5	20：00	22：00	DHW	50℃

Specific operational procedures for the unit are as follows:

Time	Unit Action
1：00	DHW Mode On
6：00	DHW Mode Off
7：00	Heating Mode On
9：00	Heating Mode Off
11：00	Cooling Mode On
13：00	Cooling Mode Off
16：00	Cooling Mode On
19：00	Cooling Mode Off
20：00	DHW Mode On
22：00	DHW Mode Off

Note: The timer settings for this group will be invalid if the start and end times are identical, the time period overlaps with other timers. or the temperature exceeds the allowed range for this mode.

Weekly Timer

In the timer menu, select "Weekly Timer" to access it. Weekly Timer allows you to select specific days of the week to execute the daily timer schedule, based on the daily timer settings.

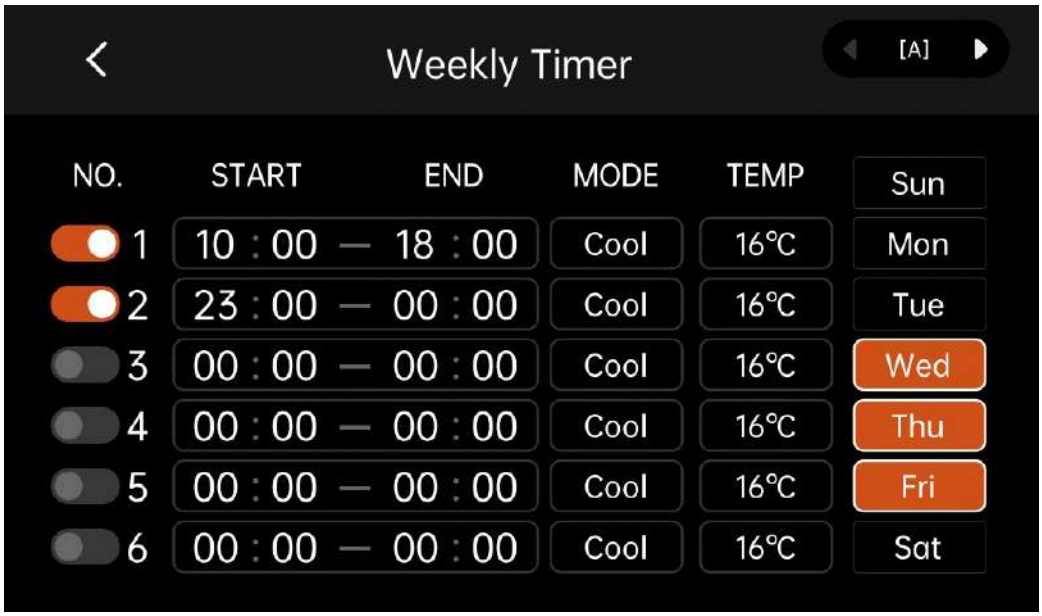

Note:

① Daily and weekly timers cannot be enabled simultaneously.

② Timer setup procedures are identical to normal power-on/off operations.

③ Timer groups will be invalid if:

- Start and end times are identical
- The time period overlaps with other timers
- Temperature exceeds the mode's permissible range

Cancel Timer

To cancel all scheduled power-on/off settings at once (without affecting other timed functions), follow the steps outlined in this section.

In the Timed Power On/Off menu, tap "Clear Timers." A confirmation pop-up will appear; tap the checkmark (√) to confirm clearing the timers and close the pop-up.

If a daily or weekly timer is active, the timer icon will appear on the main interface. If a daily or weekly timer is inactive, the timer icon will not appear on the main interface.

9.5.2 Disinfection Function

The disinfection function is designed to eliminate bacteria and pathogens within the hot water tank. The tank temperature will be forced to reach 61-70 degrees Celsius (the exact value determined by the parameter "Disinfection Temperature"), which can be configured in the advanced settings.

Disinfection Timer

Before using the disinfection function, ensure that the parameter under ‘‘User Parameters’’ > [Scheduled Disinfection Function] is set to Enabled (refer to the parameter table in User Parameters for details). If this parameter is set to Disabled, the disinfection function will not be available. Below are instructions for scheduled and manual operation. For scheduled use:

On the main screen, press  to enter the menu. Locate and select "Timer Settings". Click to choose "Scheduled disinfection".



After setting the start time, select the day or days of the week when it should take effect on the bottom side.

Manual disinfection

Manual control takes precedence over timed control. The manual disinfection function can be activated or deactivated by setting the "Current Status."

If the current status is "Off," manually click to activate the disinfection function.

If the current status is "On," manually click to deactivate the disinfection function.

9.5.3 Silent timer

To prevent excessive noise during machine operation from affecting user experience or disturbing others, we can activate silent mode during specific periods to reduce noise levels. Silent mode offers two levels: Level 1 and Level 2. In Level 2 mode, the max. speed of the fan and compressor is lower than in Level 1.

Click to select "Silent Timer" to enter the settings interface. Within this interface, you can choose the quiet level (Level 1 or Level 2), as well as the start and end times.

There are two sets of scheduled times available. Use the toggle switch to the left of each set to enable or disable that specific schedule.

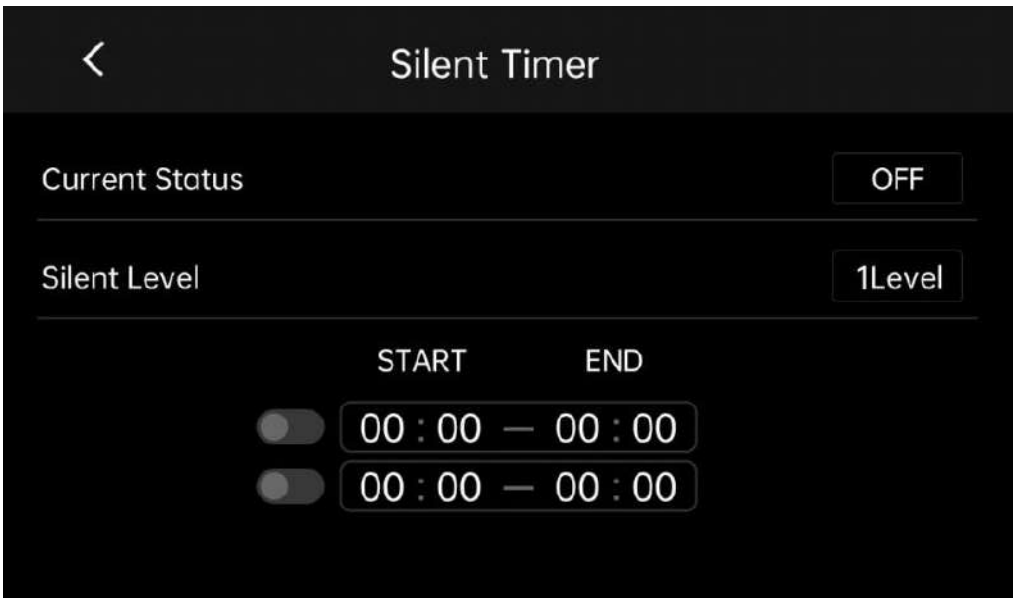

9.5.4 DHW Pump Timer

The DHW Pump Timer function returns water to the water network, enabling nearly instant hot water upon turning on the faucet without waiting for cold water to drain out. This significantly conserves water resources while enhancing user comfort.

Before using, please install and activate DHW Pump(PUMPret) function.

By switching the timers for each numbered group, you can activate or deactivate the timer for that group. Setting the start time for the return water pump will achieve zero cold water flow at that moment.

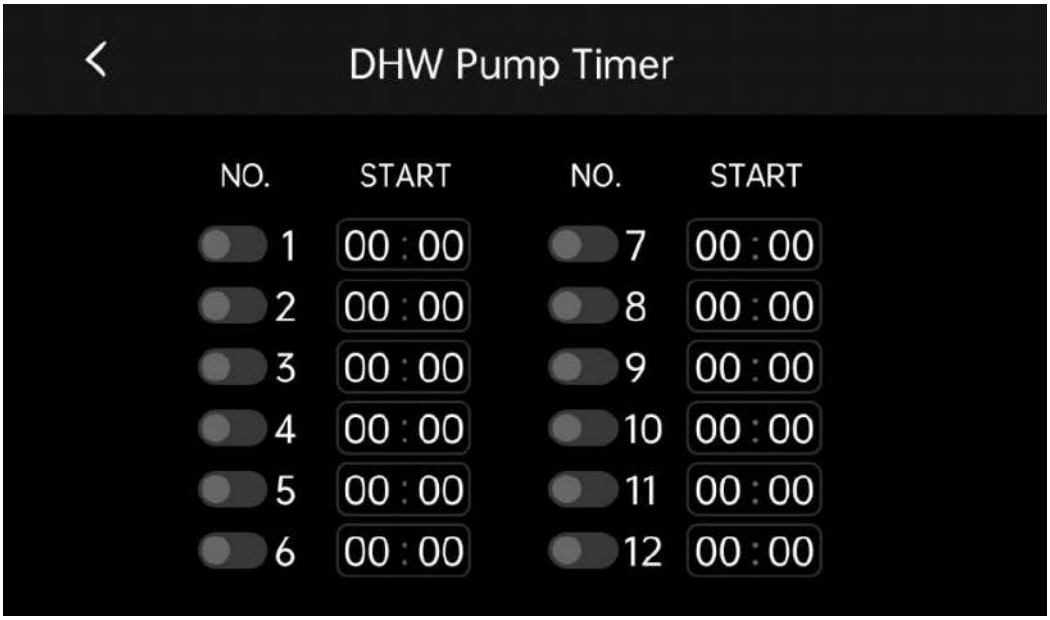

9.6 WiFi Setup

For details, please refer to the Network Setup User Manual.

9.7 User Parameter Settings

On the main interface, click to enter the settings menu, locate "User Parameter Settings," and select it.

User parameters can be directly accessed by end users. The interface is shown in the figure below:

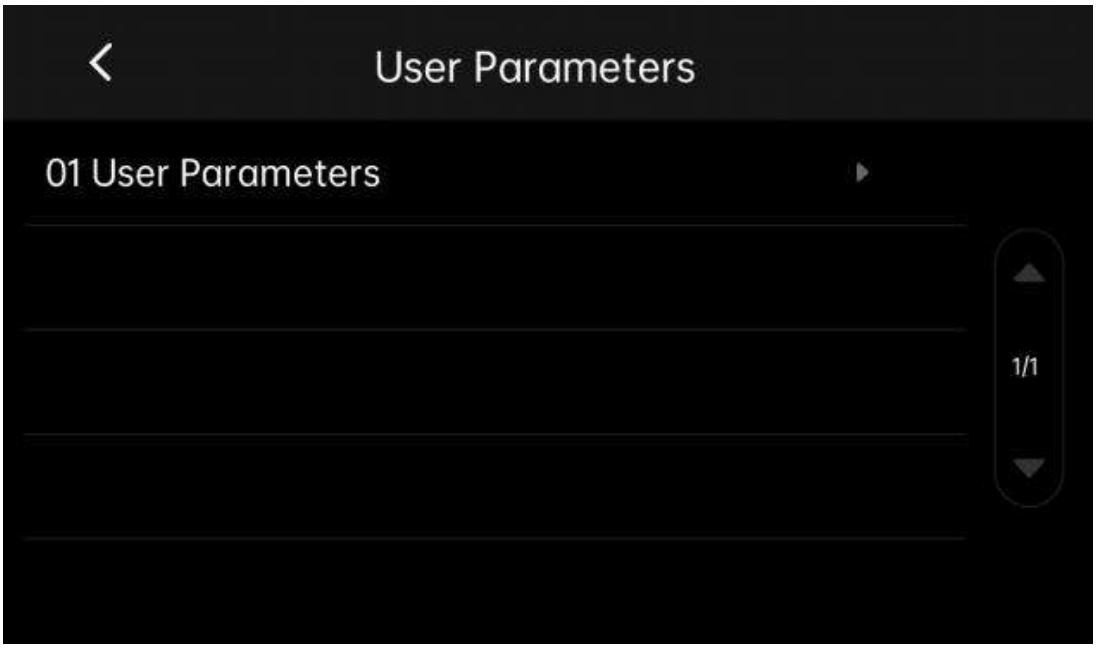

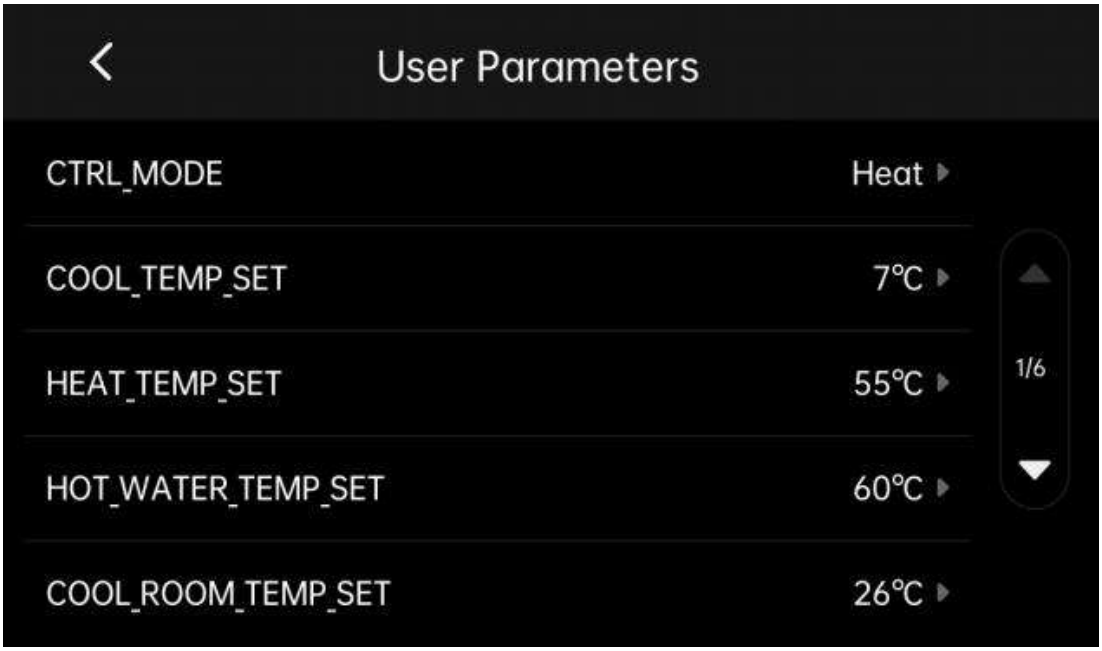

For additional user parameters, please refer to the table below (actual parameters are subject to the show on the display).

Setting Item	Setting Range	Unit
CTRL_MODE	Cooling Mode Heating Mode Auto Mode	
COOL_TEMP_SET	min…max	℃
HEAT_TEMP_SET	min…max	℃
HOT_WATER_TEMP_SET	min…max	℃
COOL_ROOM_TEMP_SET	16…30	℃
HEAT_ROOM_TEMP_SET	16…30	℃
HEAT_TEMP_SET_B	min…max	℃
HEAT_ROOM_TEMP_SET_B	16…30	℃
POWER_MODE	Standard/Turbo/Silent/Auto	
TIMED_DISINFECTION_FUNCTION	Disable/Enable	
DISINFECTION_TEMP	60…70	℃
DISINFECTION_CYCLE_MAX	90…300	Min
DISINFECTION_HIGH_TEMP_TIME	5…60	Min
Zone A Cool Curve	[0]Disable;[1]Low Temp. Curve1;[2]Low Temp. Curve2;[3]Low Temp. Curve3;[4]Low Temp. Curve4;[5]Low Temp. Curve5;[6]Low Temp. Curve6;[7]Low Temp. Curve7;[8]Low Temp. Curve8;[9]High Temp. Curve1;[10]High Temp. Curve2;[11]High Temp. Curve3;[12]High Temp. Curve4;[13]High Temp. Curve5;[14]High Temp. Curve6;[15]High Temp. Curve7;[16]High Temp. Curve8;[17]Curve9	
Zone A Heat Curve	[0]Disable;[1]Low Temp. Curve1;[2]Low Temp. Curve2;[3]Low Temp. Curve3;[4]Low Temp. Curve4;[5]Low Temp. Curve5;[6]Low Temp. Curve6;[7]Low Temp. Curve7;[8]Low Temp. Curve8;[9]High Temp. Curve1;[10]High Temp. Curve2;[11]High Temp. Curve3;[12]High Temp. Curve4;[13]High Temp. Curve5;[14]High Temp. Curve6;[15]High Temp. Curve7;[16]High Temp. Curve8;[17]Curve9	
Zone B Heat Curve	[0]Disable;[1]Low Temp. Curve1;[2]Low Temp. Curve2;[3]Low Temp. Curve3;[4]Low Temp. Curve4;[5]Low Temp. Curve5;[6]Low Temp. Curve6;[7]Low Temp. Curve7;[8]Low Temp. Curve8;[9]High Temp. Curve1;[10]High Temp. Curve2;[11]High Temp. Curve3;[12]High Temp. Curve4;[13]High Temp. Curve5;[14]High Temp. Curve6;[15]High Temp. Curve7;[16]High Temp. Curve8;[17]Curve9	
Curve#9_COOL_TA_1	-5…46	
Curve#9_COOL_TA_2	-5…46	
Curve#9_COOL_TWout2_1	5…25	
Curve#9_COOL_TWout2_2	5…25	
Curve#9_HEAT_TA_1	-25…35	
Curve#9_HEAT_TA_2	-25…35	
Curve#9_HEAT_TWout2_1	25…65	
Curve#9_HEAT_TWout2_2	25…65	
00#UNIT	[0]Disable;[1]Enable	
LED Strip Switch	On/Off	

Ambient temperature Compensation Function

Ambient temperature compensation allows presetting the target water temperature based on external ambient conditions. When weather warms up, heating output is reduced. To conserve energy, the ambient temperature compensation function selects a lower target water temperature for heating when external ambient temperatures rise.

In the User Parameters interface, select one or more of the following as needed: "Zone A Cooling Curve," "Zone A Heating Curve,"

"Zone B Cooling Curve," and "Zone B Heating Curve." Choose to disable or use different ambient temp. Compensation Function

Note: Ambient temperature compensation curves are divided into cooling and heating modes, each employing distinct curves. For heating, there are 8 low-temperature curves, 8 high-temperature curves, and one curve generated by settings. For cooling, there are 8 low-temperature curves, 8 high-temperature curves, and one curve generated by settings. These curves are presented in tabular form in ANNEX C. Please refer to ANNEX C for details.

9.8 Manual Defrost

During normal operation, the unit is equipped with an intelligent (automatic) defrost function. However, in certain special circumstances, manual defrosting may be required. Click  on the main interface to quickly access the manual defrost page.



On the manual defrost settings interface, the current status of each module is shown, such as module stopped, module running, and module defrosting.

Only when the module is in the running state and conditions like water temperature and fin temperature are met, clicking "Manual Defrost" will successfully initiate defrosting. At this point, the module's current status will switch to defrosting. Otherwise, it will remain in its original state.

9.9 Force Open Function

To enhance the system's heating efficiency and adaptability under specific conditions, ensuring effective heating across various climates and usage scenarios, this unit features functions such as underfloor heating drying, forced activation of auxiliary electric heating, and forced activation of water tank electric heating.

On the main interface, press  to enter the "Forced Open Function" page.

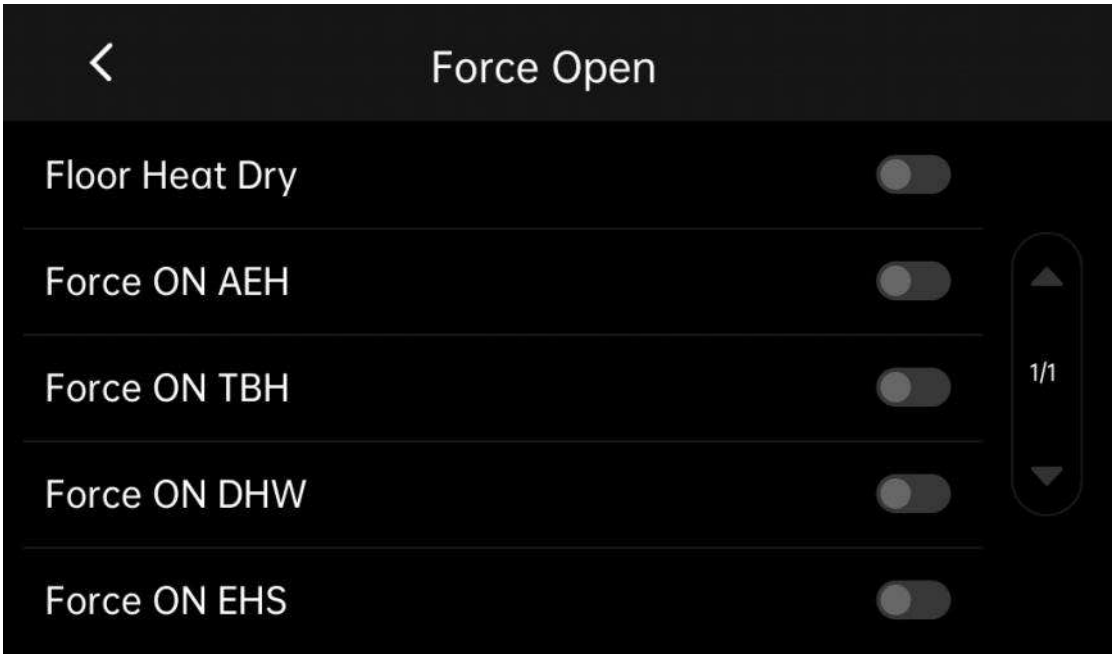

9.9.1 Floor Heating Drying Function

Using the floor heating drying function allows the floor heating system to reach optimal operating condition before formal commissioning. This ensures system performance and longevity while guaranteeing safe and efficient operation.

This function can only be activated when the [floor heating inlet temperature sensor] is in use and the unit is in standby mode.

9.9.2 Forced open auxiliary electric heater

Auxiliary electric heater can enhance the heating capacity of the unit during extremely cold weather conditions, but it consumes more energy. It is recommended to use this feature only as an emergency or supplementary measure when necessary.

This function can only be activated when [Auxiliary Electric Heater] is enabled and the unit is operating in heating mode.

9.9.3 Force open water tank heater

Force-open water tank heater enables rapid water heating by forcibly activating the tank's electric heating element, enhancing user experience.

When the system requires cooling or heating and the heat pump operates in cooling or heating mode, hot water demand may arise. The force-open water tank heater function can then be used to produce hot water.

9.9.4 Forced open DHW mode

The Forced DHW Mode function compels the system to operate in hot water production mode. During this mode, the heat pump, auxiliary electric heating, water tank electric heating, and external heat sources will all activate provided their respective conditions are met.

9.9.5 Force open external heat source

External heat sources primarily refer to heat sources other than the heat pump itself, including natural gas boilers, industrial waste heat recovery, and geothermal energy. Integrating these existing external heat sources within the user's home enhances the stability of the heating system.

In heating or DHW mode, external heat sources can be manually activated to provide additional heat.

9.10 Holiday Mode

9.10.1 Holiday Away Mode

Holiday Away Mode is commonly used during winter vacations to prevent water pipes from freezing. Activate this mode after leaving home and deactivate it before returning. Access the Holiday Away Mode settings interface.



Application Example: Suppose the current date is January 3, 2025. You will be away for two weeks starting three days later, departing on January 6, 2025, and returning on January 20, 2025. To prevent water pipes from freezing, configure settings as shown in the table below.

Parameter Name	Parameter Value
Function Usage	Use
Start	06-01-2025
End	20-01-2025
Heating Mode Usage	Use
DHW Mode Usage	Use

9.10.2 Holiday Stay-at-Home Mode

Holiday At Home mode functions similarly to Scheduled mode. When Holiday At Home mode is active, any scheduled settings will be invalidated.

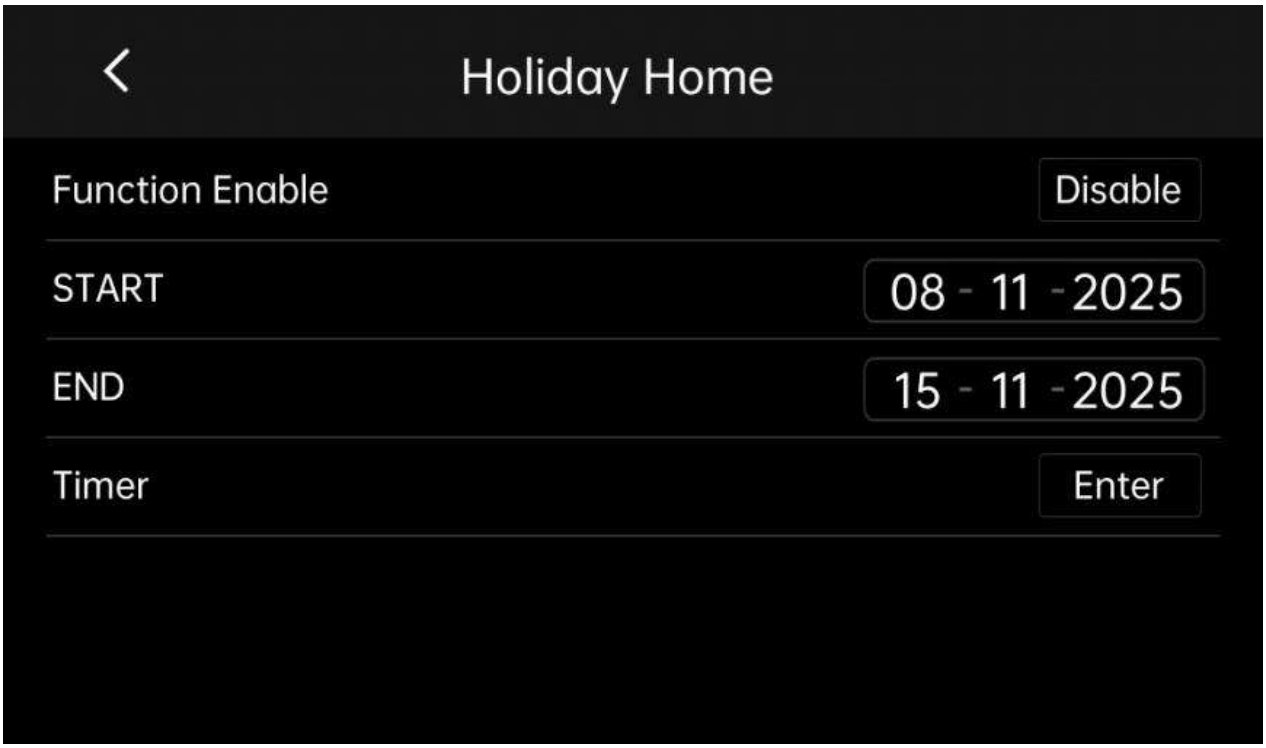

For example, if the Holiday At Home function is enabled and set to activate from July 1, 2025, to August 8, 2025, the regular scheduled function will operate before July 1, 2025, and after August 8, 2025. During the period from July 1, 2025, to August 8, 2025, the Holiday At Home function will be executed.

9.11 Fault Inquiry Interface

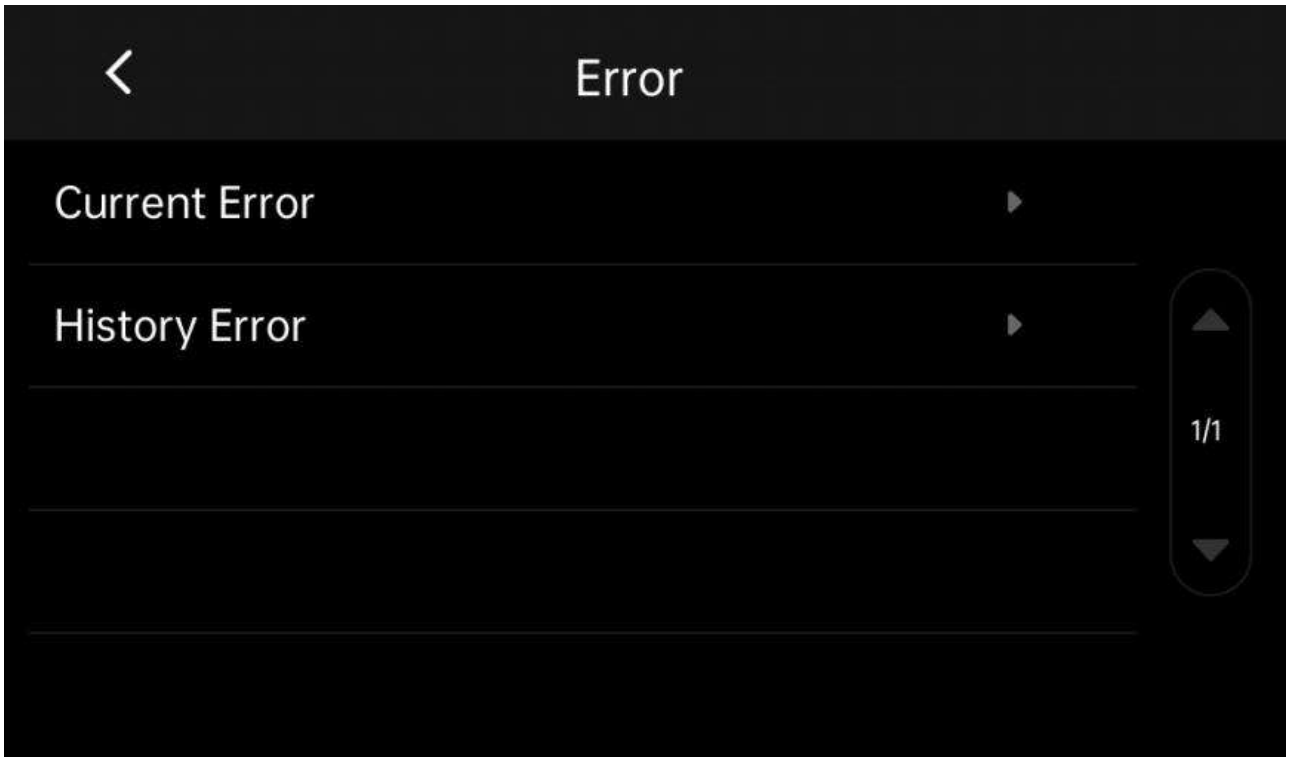

9.11.1 Current fault

Click the fault code on the main interface to view the current fault page.

In the current fault section, if a fault is present, the current fault interface appears as shown below (click the reset button to

clear all faults meeting the reset conditions).

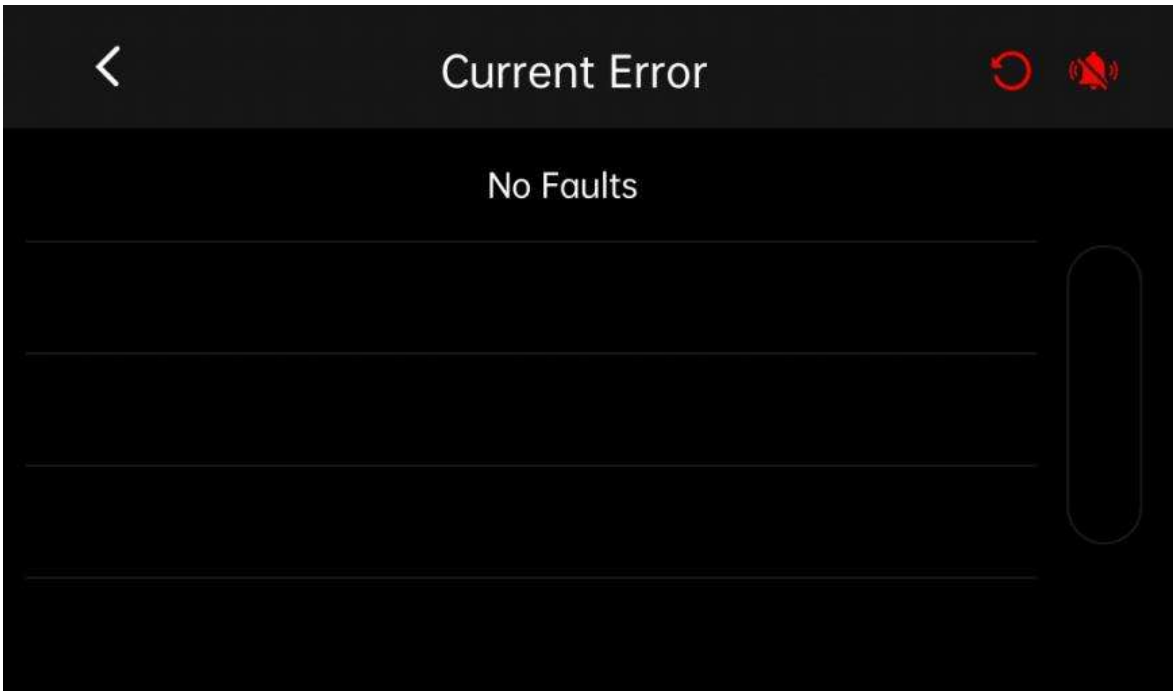

9.11.2 Historical faults

All faults that have occurred on the unit (including those that have been reset) are recorded in the controller and can be queried in the historical faults section.

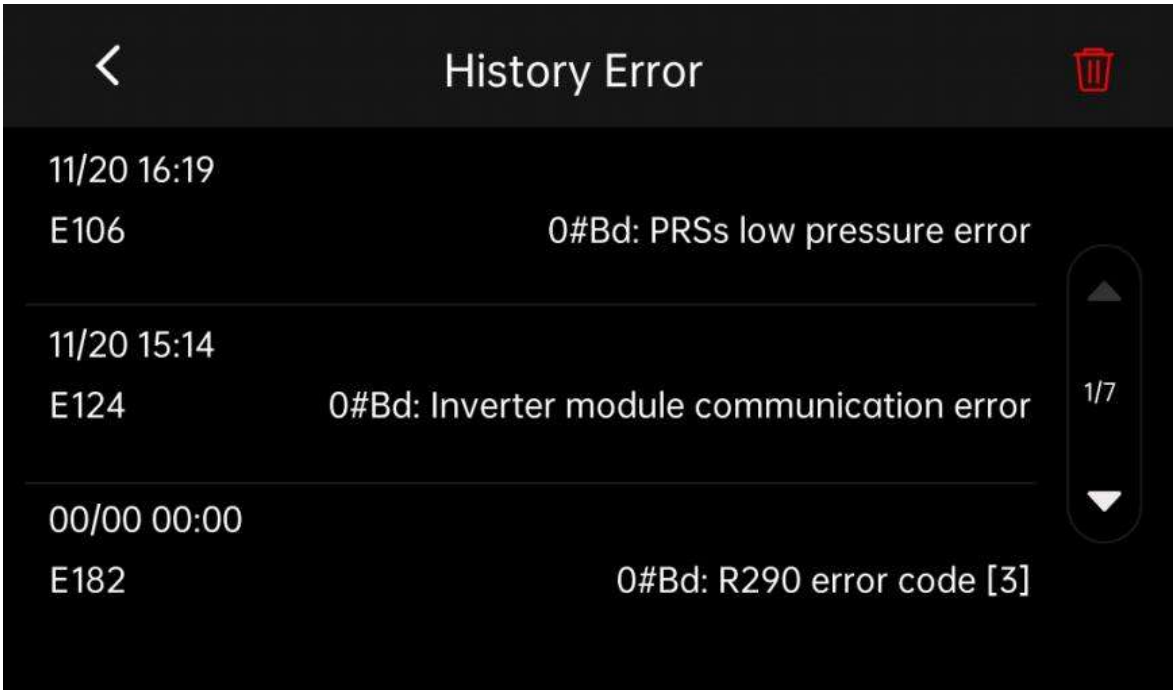

This interface shows the fault code, occurrence time, and fault description for each past incident.

Clicking the "" Clear button will erase all historical faults. Please exercise caution before proceeding to avoid accidental deletion.

9.12 Zone Settings

This interface allows you to view and configure the on/off status of Zones A and B, the temperatures of Zones A and B, the heat pump inlet and outlet temperatures, the hot water tank temperature, and the buffer tank temperature.

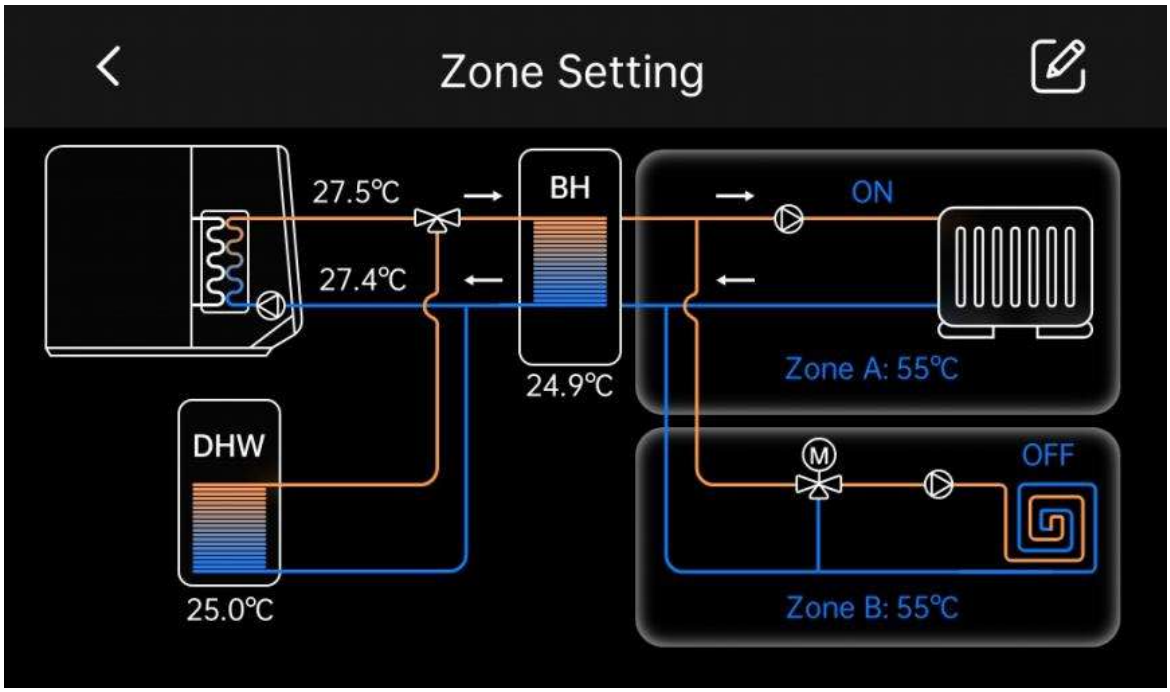

Click the button to configure the parameters and switches for zone control.

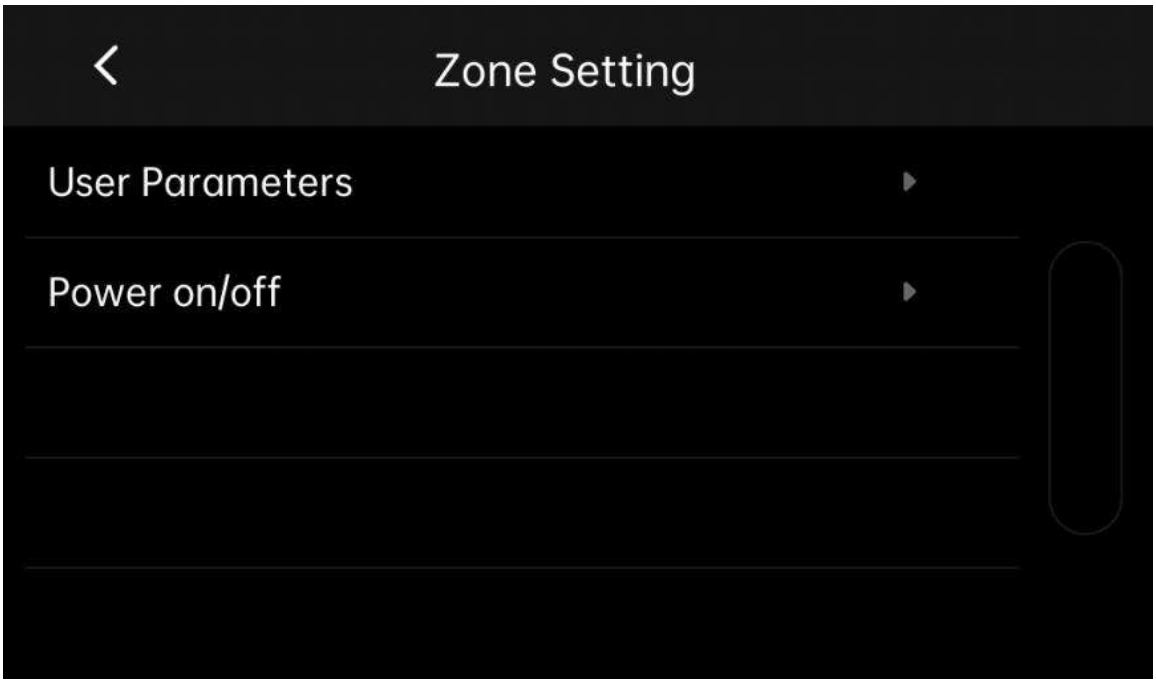

9.13 Power consumption

This interface allows you to view the machine's recent power consumption, broken down by the last 24 hours, the last 30 days, the last 12 months, and the last 10 years.



9.14 Advanced Setting

This page is used to adjust advanced system configurations. Parameter modifications carry risks; unauthorized personnel must not operate. Please consult the relevant technical support engineer for passwords of your menu levels

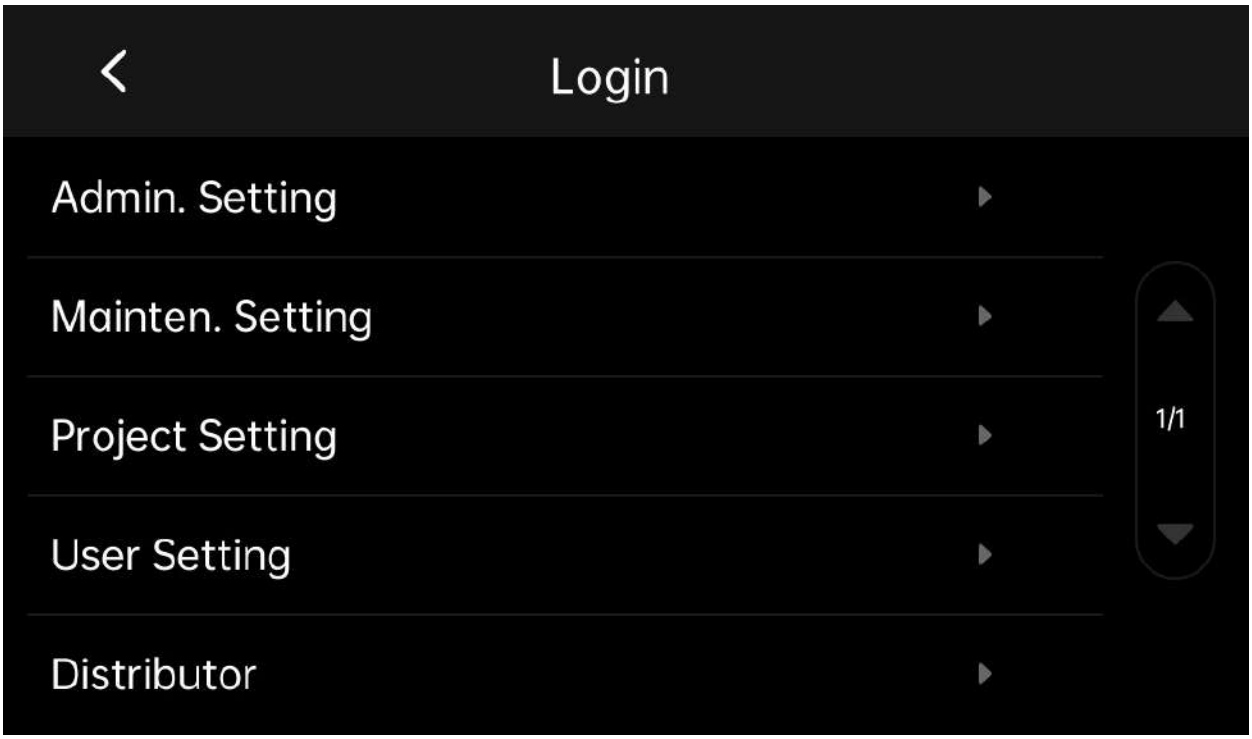

After logging in, the following pages will be displayed.

9.14.1 Parameters Config.

In parameters config. page, you can check and adjust the parameters of your role(For different roles, the parameters shown differently)





Common used:

01 User Parameters

02 System Parameters

11 Input & Sensor

13 Energy Control

14 Engineering Settings

9.14.2 Manual test

In manual test page, you can switch the signal or component manually.

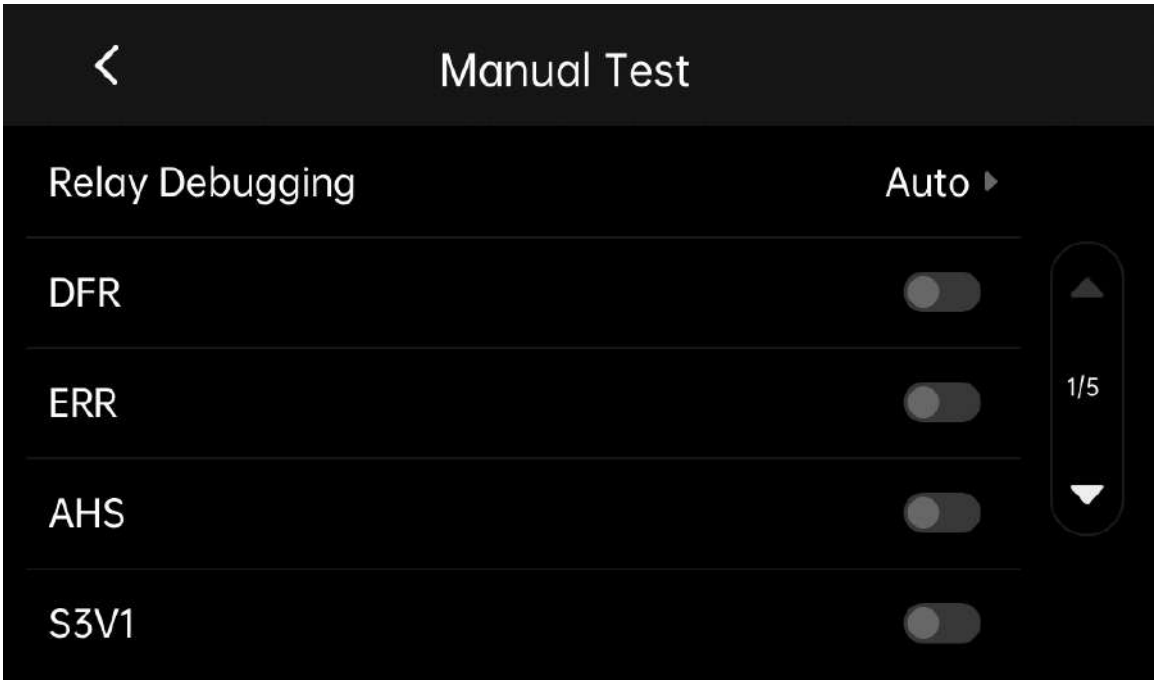

Before manual test, please switch [Relay Debugging] to manual.

9.14.3 Function Debug

In function debug page, you can activate the test running function.

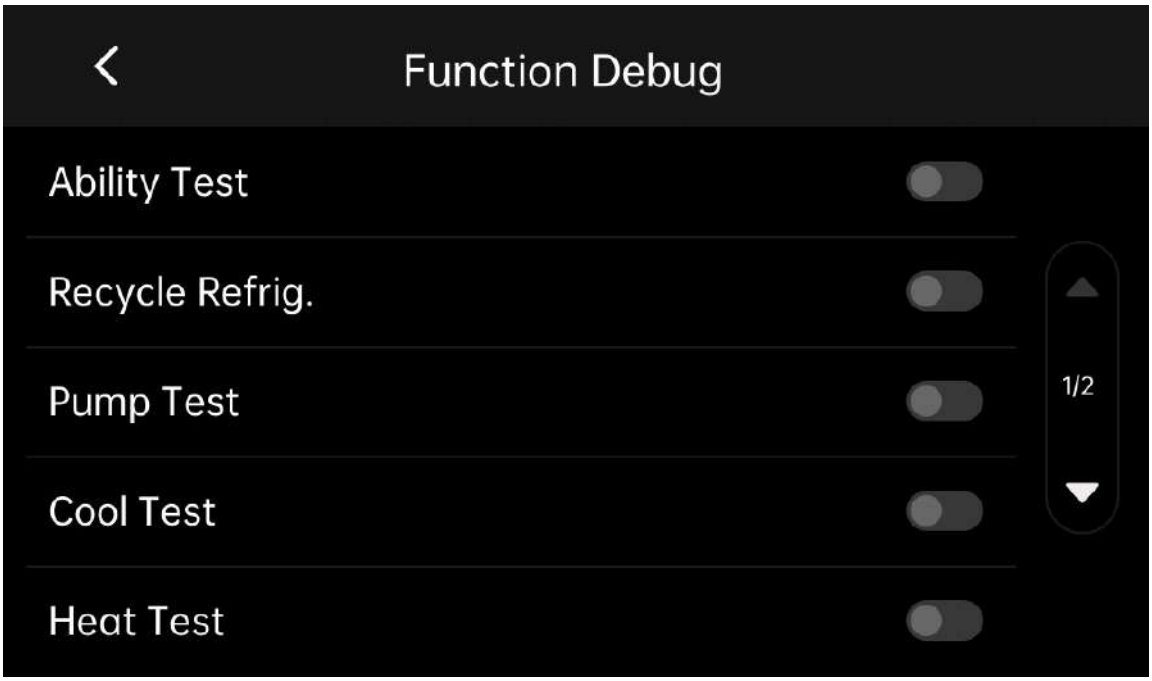

9.14.4 Reset

In Reset page, you can reset the parameters or data you want.

10 Configuration

10.1 Overview: Configuration

This chapter outlines the necessary steps and information required to configure the system after installation.

Failure to configure the system correctly may result in unexpected operation. System configuration affects the following:

- Software calculations
- User interface display and functionality

The unit must be configured by an authorized installer to align with the installation environment (such as outdoor climate and installed options) and meet user requirements.

10.2 Check before configuration

☐	**Field wiring:** Ensure all wiring connections comply with the instructions in "8. Electrical installation".
☐	**Fuses, circuit breakers, or protection devices:** Verify their size and type against the instructions in "8.3 Guidelines for Connecting Electrical Wires". Ensure no fuses or protection devices have been bypassed.
☐	**Backup heater's circuit breaker**: Confirm the backup heater's circuit breaker in the switch box is closed (varies by backup heater type). Refer to the wiring diagram.
☐	**Booster heater's circuit breaker**: Ensure the booster heater's circuit breaker is closed (only applicable to units with an optional domestic hot water tank).
☐	**Internal wiring**: Inspect wiring and connections inside the switch box for looseness or damage, including earth wiring.
☐	**Mounting**: Verify that the unit and water loop system are properly installed to prevent water leakage, abnormal noises, and vibrations when the unit starts.
☐	**Damaged equipment**: Inspect internal components and piping for damage or deformation.
☐	**Refrigerant leak**: Check for refrigerant leakage inside the unit. If a leak is found, follow the relevant guidelines in "Safety Precautions".
☐	**Power supply voltage**: Check the power supply voltage to ensure it matches the voltage specified on the unit’s identification label.
☐	**Air vent valve**: Ensure the air vent valve is open (at least 1 full turn).
☐	**Shut-off valve**: Confirm the shut-off valve is fully open.
☐	**Sheet metal**: Ensure all sheet metal components of the unit are correctly installed.
☐	**Water volume:** Verify the system’s water volume is within the specified limits.
☐	**Strainer**: Ensure the strainer is correctly installed and clean.

After powering on the unit, check the following items:

☐	**Upon power-on of the unit, nothing is displayed on the wired controller**: Before diagnosing possible error codes, check for the following issues, - Wiring connection problems (power supply or communication signal). - Fuse failure on the PCB.
☐	**Error code "water flow protection" is displayed on the wired controller**: - There is residual air in the system. - The water level in the system is insufficient. Before starting the test run: Ensure the water system and tank are filled with water and all air is purged. Otherwise, the pump or backup heater (optional) may be damaged.
☐	**Error code "Communication error" is displayed on the wired controller**: - Check the wiring between the wired controller and the unit.
☐	**Initial start-up at low outdoor ambient temperature**: To perform the initial start-up in low outdoor ambient temperatures, the water must be heated gradually. Gradually open the end-load to allow the water temperature to rise steadily.

11 Commissioning

11.1 Overview: Commissioning

This chapter describes what you have to do and know to commission the system after it is installed and configured.

Typical workflow

Commissioning typically consists of the following stages:

1. Checking the "Checklist before commissioning".
2. Performing an air purge.
3. Performing a test run for the system.
4. If necessary, performing a test run for one or more actuators.

11.2 Precautions during commissioning

 **CAUTION**
1. When connecting the power supply: Connect the earth cable first, before making the current-carrying connections.
2. When disconnecting the power supply: Disconnect the current-carrying cables first, before separating the earth connection.
3. After completing electrical work, confirm that each electrical component and terminal inside the electrical components box is securely connected.

11.3 Checklist before commissioning

Before starting the unit, a number of verification must be carried out on the installation process to ensure the unit can operate under optimal conditions. The following checklist is not exhaustive and should only be used as a minimum reference standard.

☐	The complete installation instructions, as outlined in the installer reference guide, have been read.
☐	The fan rotates freely without obstruction.
☐	The flow direction of all water pipes is correct.
☐	All system piping operates in accordance with installation requirements.
☐	The unit’s power supply voltage has been checked and is within authorized limits.
☐	The unit is properly grounded.
☐	Protective devices and disconnecting devices are present.
☐	All electrical connections are tight and secure.
☐	All pipes are free of leaks, and adequate air ventilation is ensured.

☐	Fuses or locally installed protection devices are installed as specified in this document and have not been bypassed.
☐	Pipes of the correct size are installed and properly insulated.
☐	Shut-off valves are correctly installed and fully open.
☐	Automatic air purge valves are open.
☐	The pressure relief valve discharges water when opened, and the water is clean.
☐	The domestic hot water tank is completely filled.
☐	The minimum water flow is guaranteed under all conditions.

11.4 Checklist during commissioning

☐	The minimum flow rate during backup heater/defrost operation is guaranteed under all conditions.
☐	An air purge must be performed.
☐	An actuator test run must be performed.
☐	A test run must be performed.

11.4.1 Water flow rate

Model	Rated Water Flow Rate	Minimum Water Flow Rate	Maximum Water Flow Rate
iGXC08	1.38 m³/h	1.05 m³/h	2.0 m³/h
iGXC11	1.80 m³/h	1.26 m³/h	2.5 m³/h
iGXC11T	1.80 m³/h	1.26 m³/h	2.5 m³/h
iGXC13	2.20 m³/h	1.54 m³/h	2.5 m³/h
iGXC13T	2.20 m³/h	1.54 m³/h	2.5 m³/h
iGXC16	2.80 m³/h	2.10 m³/h	3.0 m³/h
iGXC16T	2.80 m³/h	2.10 m³/h	3.0 m³/h

11.4.2 Water pressure adjustment requirements

1. Before the test, the pipes must be fixed, and the connections shall be laid exposed.
2. A pressure gauge, with a pressure accuracy of 0.01 MPa, must be installed at the lowest part of the test pipe section.
3. Slowly fill the pipe with water starting from the lowest section, fully expel the air from the pipe, and conduct a water tightness test.
4. Pressurize the pipe slowly using a manual pump; the pressurization process shall take no less than 10 minutes.
5. After pressurizing to the specified test pressure, maintain a stable pressure for 1 hour. The pressure drop shall not exceed 0.06
6. At 1.15 times the working pressure, maintain a stable pressure for 2 hours. The pressure drop shall not exceed 0.03 MPa.
7. Before the test, ensure there are no leaks at any connection points.
8. Within 30 minutes, up to two pressure replenishment are allowed to reach the specified test pressure.

11.4.3 Air purge

NOTICE
1. Before starting the air purge, open the safety valve and check whether the water circuit is sufficiently filled with water. Only when water flows out of the valve after opening it can you start the air purge procedure.
INFORMATION
1. For best results, each loop should be air-purged separately.
2. Ensure all air is purged before conducting the test run. Additionally, avoid disturbances in the water circuit during the test run.

Why

During the commissioning and installation of the unit, it is crucial to expel all air from the water circuit. If air is not fully purged from the water circuit of a heat pump system, multiple critical problems may occur:

1. **Air locks**: Trapped air can obstruct water flow, disrupting circulation in pipes or components such as heat exchangers. This impairs heat transfer efficiency, resulting in subpar heating/cooling performance and uneven temperature distribution.
2. **Cavitation**: Air bubbles in the water can collapse violently under pressure, leading to cavitation. Over time, this erodes pump impellers, valves, and pipe walls, damaging components and shortening their service life.
3. **Corrosion acceleration**: Oxygen in trapped air reacts with metal surfaces (such as pipes and heat exchangers), accelerating rust and corrosion. This weakens the system's structural integrity, raises the risk of leaks, and may necessitate premature part replacement.
4. **Increased noise and vibration**: Air in the water circuit causes turbulent flow, leading to gurgling sounds, vibrations, or unstable operation of pumps and fans.
5. **System inefficiency or failure**: Restricted water flow and reduced heat exchange can force the heat pump to operate under heavier loads, increasing energy consumption. In severe cases, this may trigger safety shutdowns or complete system failure due to overheating or pressure imbalances.

How

1. Click the Menu button to enter the main menu interface.



2. Find Advanced Settings on the main menu interface and click it, then enter the password of your menu levels.

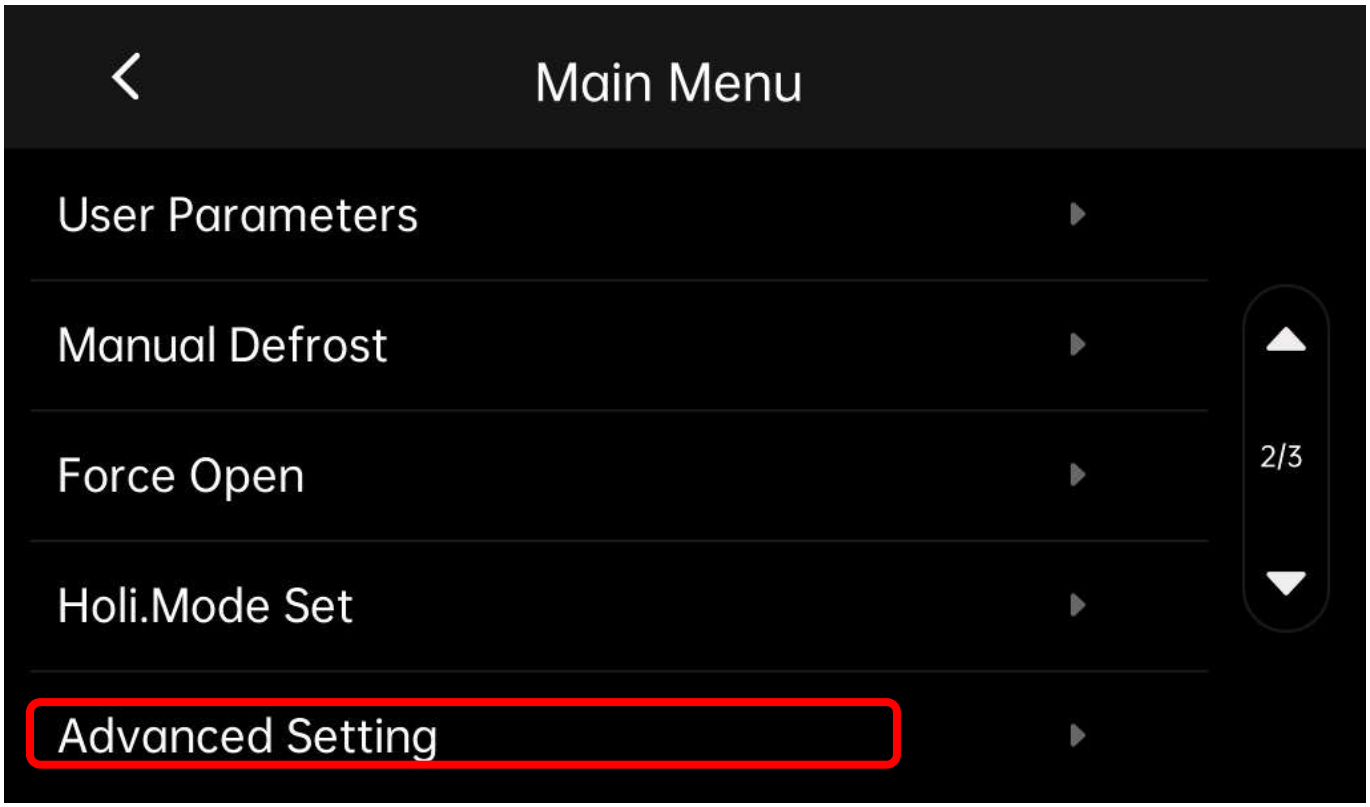

3. Find the Manual Test and select

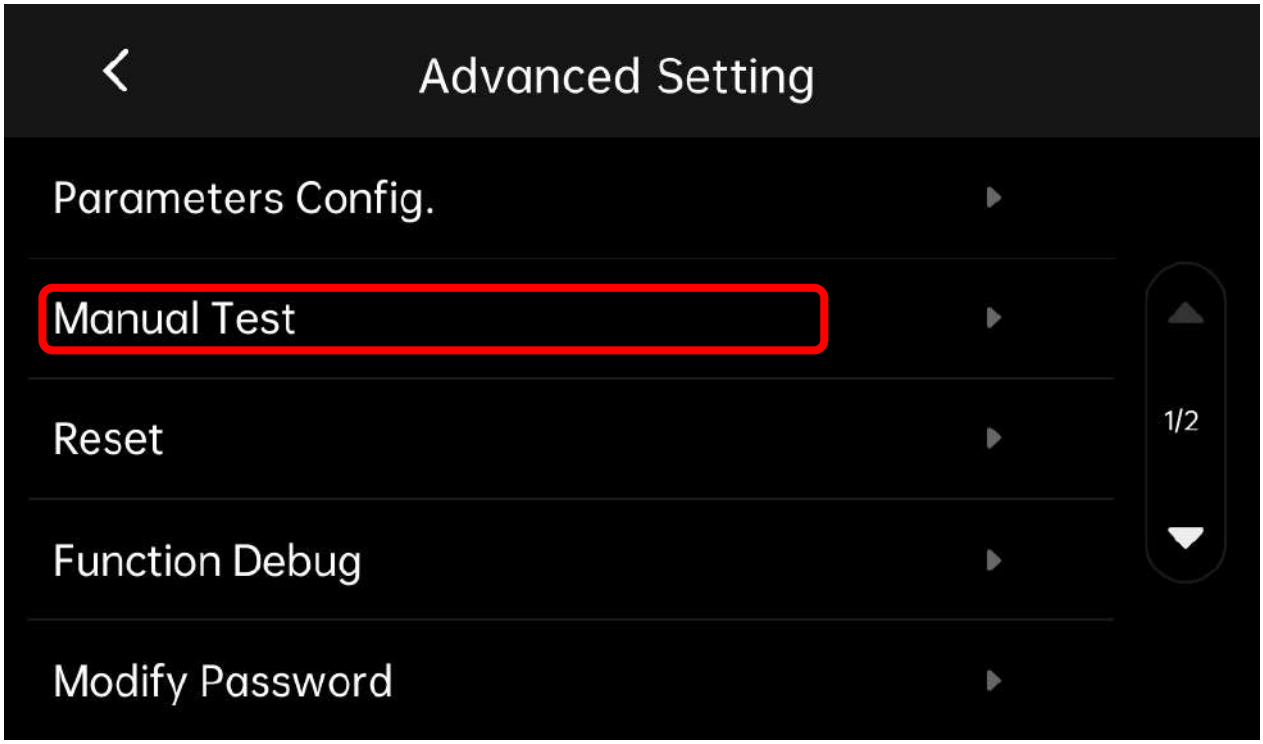

4. Find the main circulation pump and turn it on. The pump will continuously circulate water through the system until all air is purged from the pipes.

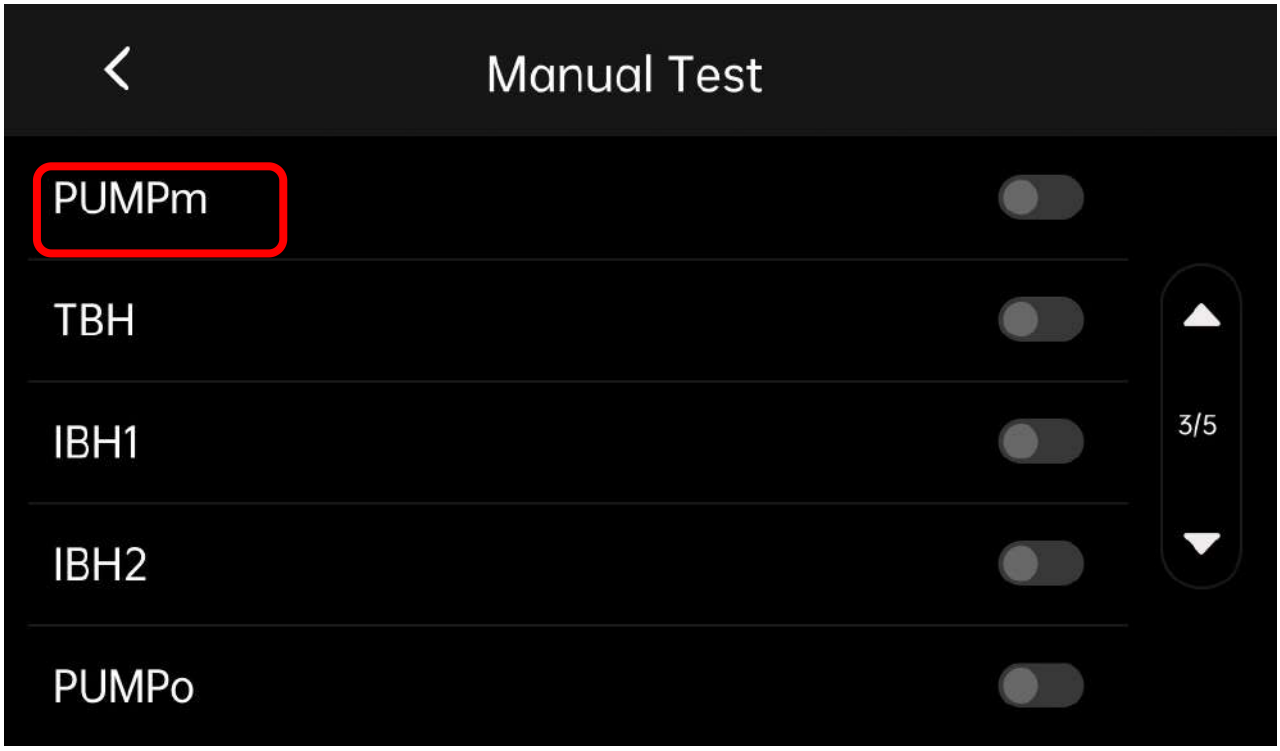

11.4.4 Actuator test run

NOTICE
1. During the commissioning of the actuator, the protection function of the unit is disabled. Excessive use may damage components.

Why

Check whether each actuator is in good working conditions.

What - Actuator List

No.	Code Name	Load	Note
1	SL1 SL2	Solar water heater	
2	P_O N	Secondary Circulation Pump	
3	IBH1	Electric heater1	
4	IBH2	Electric heater2	
5	TBH	DHW tank heater	Invisible if DHW is disabled
6	20FF/20N N	Cooling three way valve	
7	30FF/30N N	Mixing valve	
8	10FF/10N N	DHW three way valve	
9	AHS1 AHS2	Auxiliary heat source	
10	HT N	Pan heater	
11	P_R N	Return water pump	Invisible if DHW is disabled
12	P_S N	Solar water pump	
13	P_M N	Mixing water pump	

How

1. Click the Menu button to enter the main menu interface.



2. Find Advanced Settings on the main menu interface and click it, then enter the password of your menu levels.

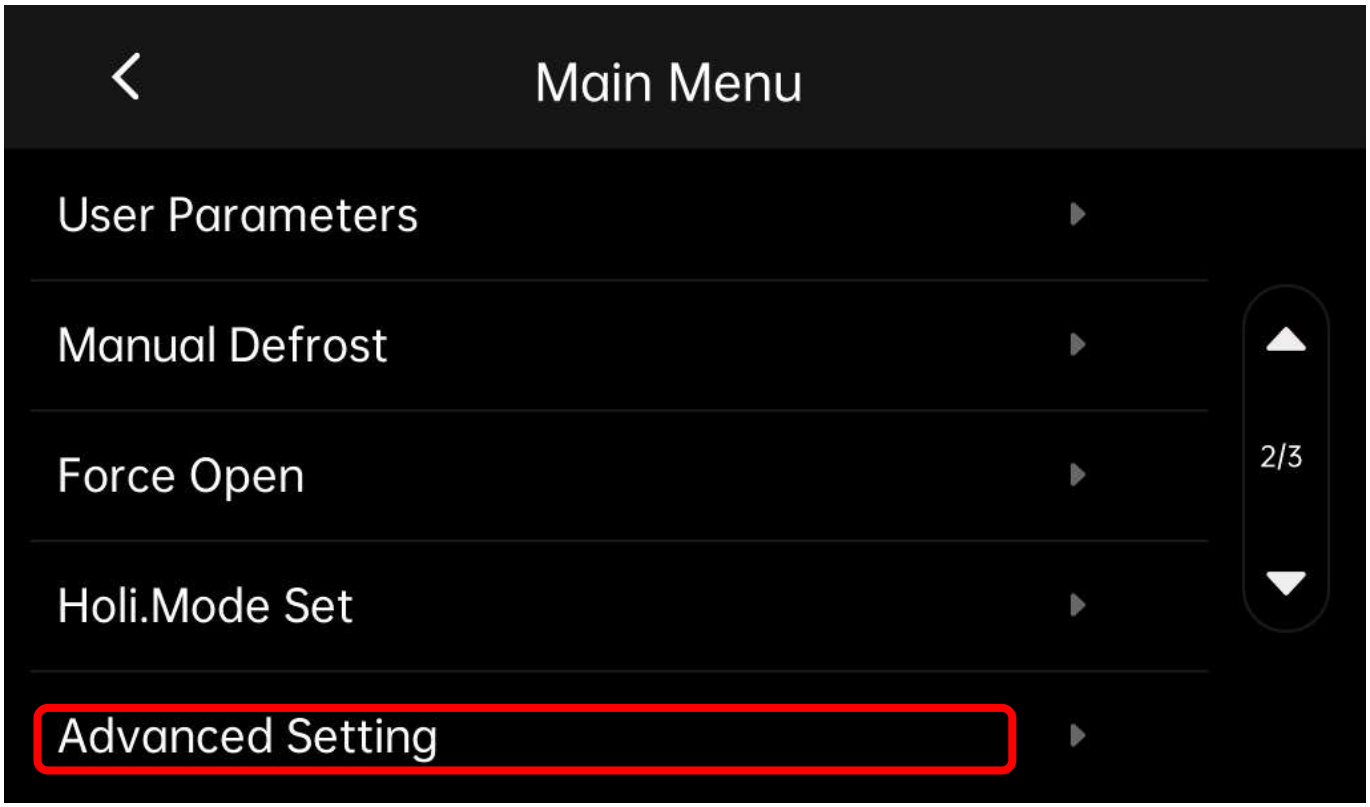

3. Find the Manual Test and select.

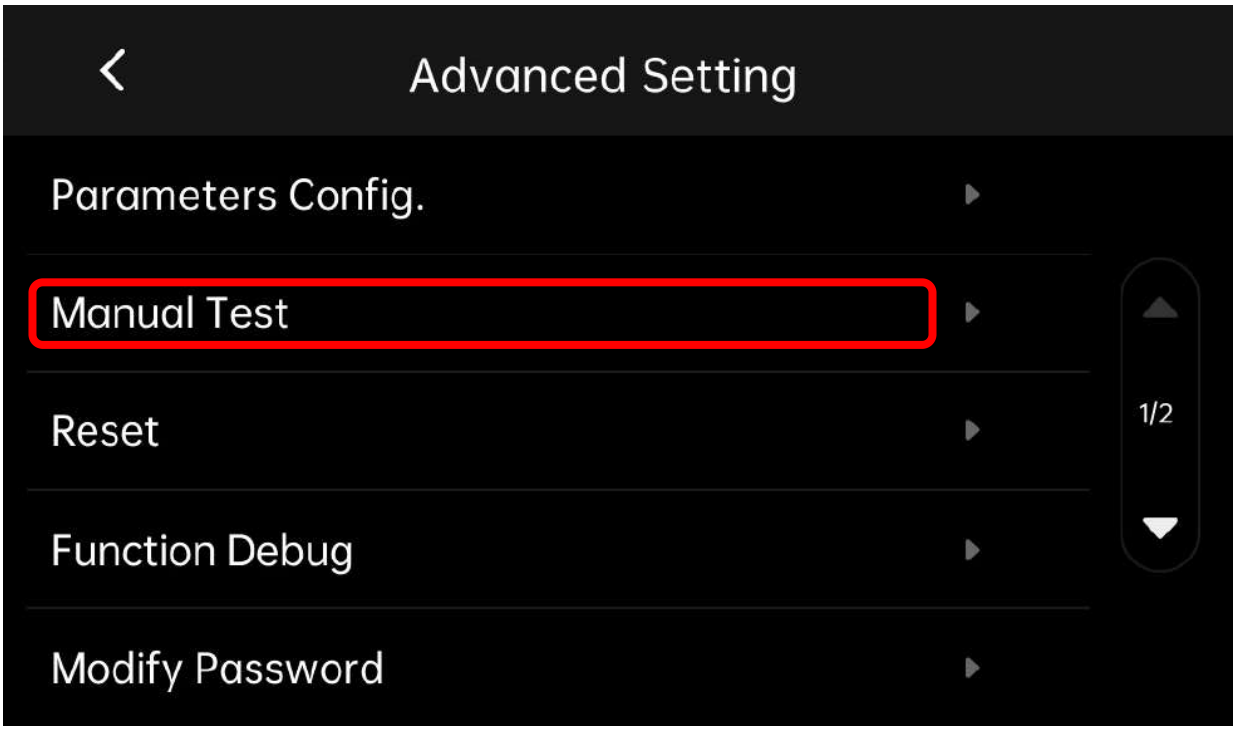

4. Select the corresponding actuator for testing.

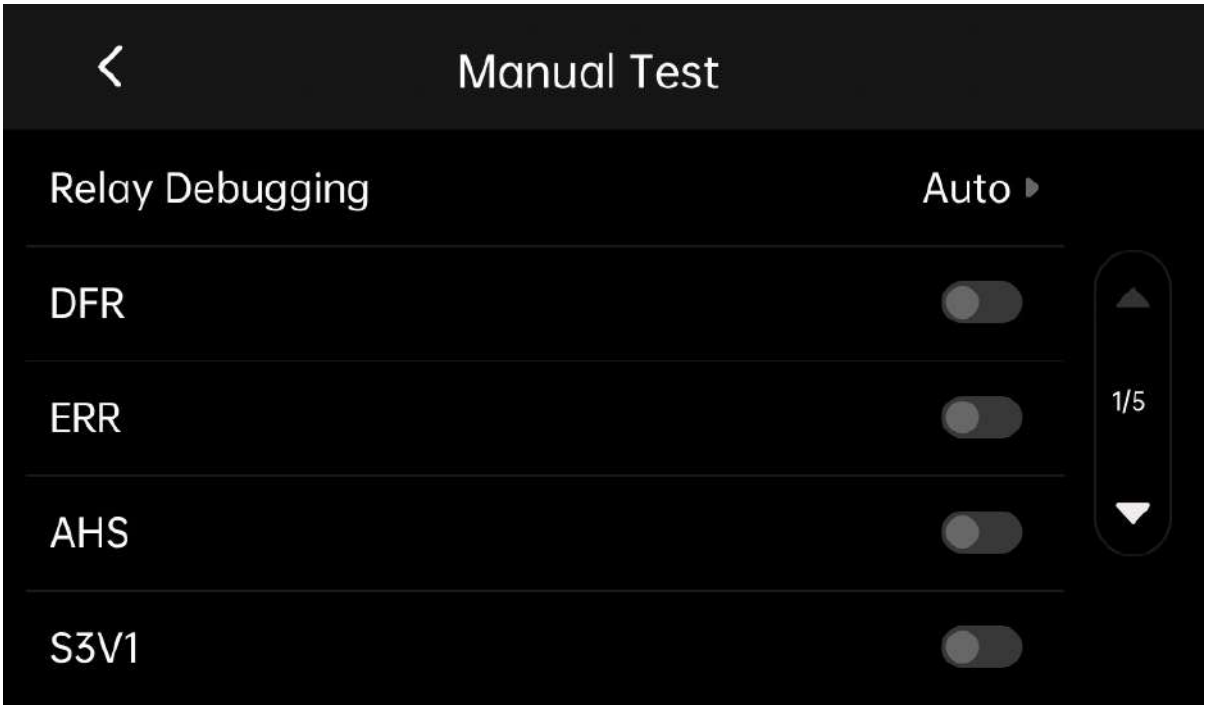

11.4.5 Unit test run

INFORMATION
1. If the outdoor temperature is outside the operating range, the unit may fail to operate or fail to deliver the required capacity.

Why

Conduct test runs on the unit and monitor the leaving water temperature and tank temperature to verify that the unit is functioning properly.

What

Circulated pump operation

Cooling operation

Heating operation

DHW operation

How

1. Press the "" button on the wired controller to start the heat pump. Check if the water pump is running.

2. When the water pump has been running for 3 minutes, the compressor will start.

Listen for any strange sounds from the compressor. If an abnormal sound occurs, stop the heat pump and check the compressor. If the compressor is running well, check the refrigerant pressure gauge.

3. Then check if the power input and running current meet the manual requirements. If not, stop the machine and inspect.

4. Adjust the valves on the water circuit to ensure good hot (cold) water supply for each valve, meeting the heating (or cooling) requirements. Check if the outlet water temperature is stable.

5. The parameters of the wired controller are set by the factory, and users shall not change them on their own.

6. It is necessary to verify against the project delivery checklist for compliance.

12 Hand-over to the user

Once the trial run is completed and the unit is operating properly, ensure the following points are clear to the user:

- Clear the error history in the controller before handing over the unit to the user.
- It is strongly recommended to set up the unit's WLAN connection. For more details, refer to the APP.
- Ensure the user has received the printed documentation and advise them to keep it for future reference.
- Explain to the user how to operate the system correctly and what steps to take in case of problems.
- Demonstrate to the user the maintenance procedures for the unit.
- Explain the energy-saving tips to the user as outlined below.

12.1 Energy saving tips

Tips about room temperature

1. Ensure the set room temperature is never excessively high (in heating mode) or excessively low (in cooling mode), and always adjust it according to actual needs. A 1-degree Celsius increase or decrease can save up to 6% of heating or cooling costs.
2. Do not adjust the set room temperature drastically to speed up heating or cooling, as such operation will not accelerate the process.
3. If your system includes slow-response heat emitters (such as underfloor heating), avoid large fluctuations in the set room temperature and do not let the room temperature rise or drop excessively. Otherwise, it will take more time and energy to reheat or cool the room.
4. Use a weekly schedule to meet your regular heating or cooling needs. If necessary, you can easily adjust the schedule:

- For short periods: You can temporarily override the scheduled room temperature until the next scheduled setting takes effect. For example, this can be done during a party or when you are away for a few hours.
- For longer periods: You can use the holiday mode.

Tips about DHW tank temperature

1. Use a weekly schedule to meet your regular domestic hot water needs (only in scheduled mode).
2. Program the DHW tank to heat up to a preset temperature at night, as space heating demand is low during this period.
3. If heating the DHW tank only at night is insufficient, program an additional heating cycle during the day to reach the preset temperature.
4. Ensure the set temperature of the DHW tank is not excessively high. For example, after installation, reduce the tank temperature by 1℃ each day and check if there is still an adequate supply of hot water.
5. Program the domestic hot water pump to turn on only during daytime periods when instant hot water is needed, such as in the morning and evening.

13 Control and function

13.1 Temperature control

13.1.1 Heating/Cooling mode

① Heating Mode:

• Return Water Temperature Control

When return water temperature < Target water temperature - [HEAT_LOAD_dT], unit will start

When return water temperature > Target water temperature + [HEAT_UNLOAD_dT], unit will stop.

• Outlet Water Temperature Control

When outlet water temperature < Target water temperature - [HEAT_LOAD_dT], unit will start

When outlet water temperature > Target water temperature + [HEAT_UNLOAD_dT], unit will stop.

• Buffer Tank Temperature Control

When top buffer tank temperature < target water temperature - [HEAT_LOAD_dT], unit will start

When top buffer tank temperature > target water temperature + [HEAT_UNLOAD_dT], unit will stop

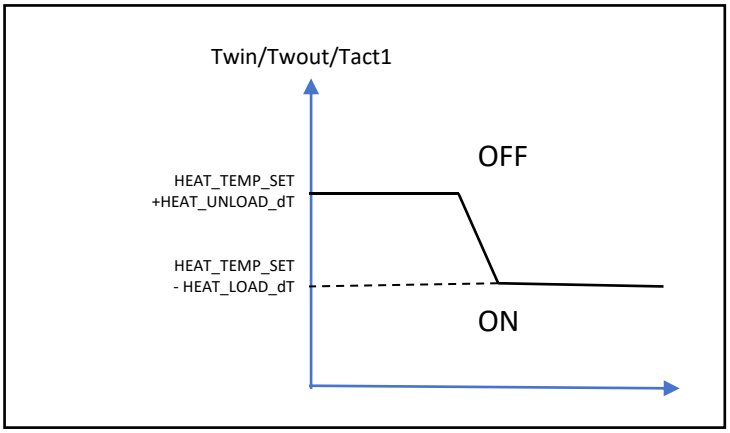

• Room Temperature Control (1 zone TR)

When room temperature < target room temperature - [ROOM_TEMP_dT], unit will start

When room temperature > target water temperature + [ROOM_TEMP_dT], unit will stop

The targeted water temperature will be adjusted by room temperature automatically.

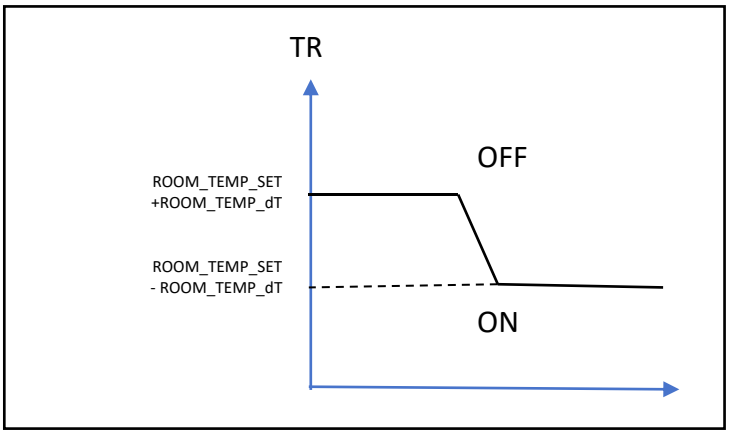

② Cooling Mode:

• Return Water Temperature Control

When Return water temperature > target water temperature + [COOL_LOAD_dT], unit will start

When Return water temperature < target water temperature - [COOL_UNLOAD_dT], unit will stop.

• Outlet Water Temperature Control

When outlet water temperature > target water temperature + [COOL_LOAD_dT], unit will start

When outlet water temperature < target water temperature - [COOL_UNLOAD_dT], unit will stop.

• Buffer Tank Temperature Control

When top buffer tank temperature < target water temperature + [COOL_LOAD_dT], unit will start

When top buffer tank temperature > target water temperature - [COOL_UNLOAD_dT], unit will stop.

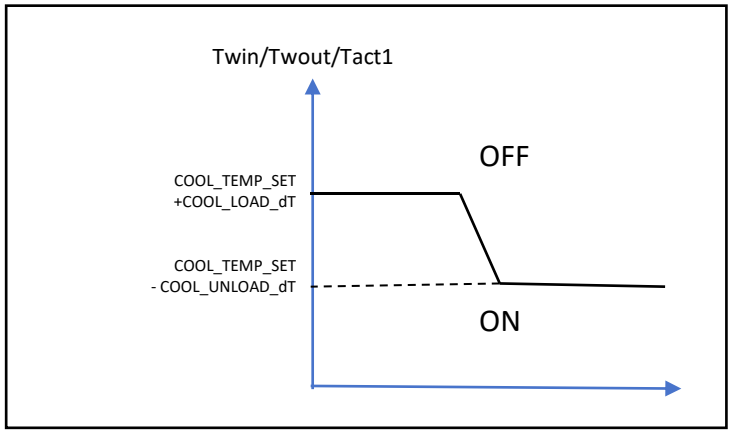

• Room temperature control(1 zone TR)

When room temperature < target room temperature - [ROOM_TEMP_dT], unit will start

When room temperature > target water temperature + [ROOM_TEMP_dT], unit will stop

The targeted water temperature will be adjusted by room temperature automatically.

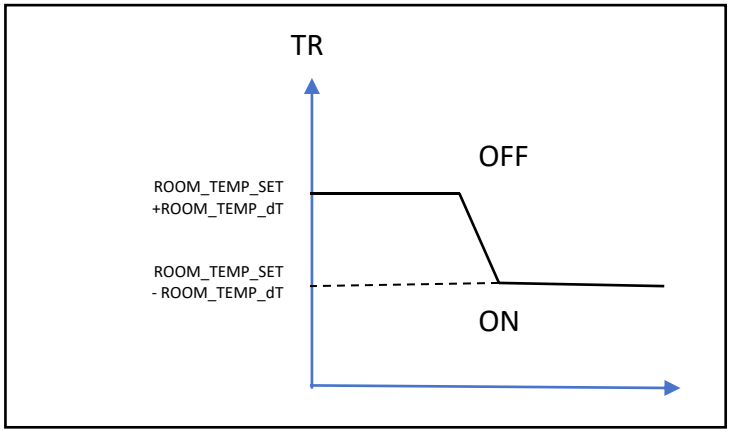

13.1.2 DHW mode

When hot water tank temperature < target temperature - [HW_dT], unit will start.

When hot water tank temperature ≥ target temperature, unit will stop.

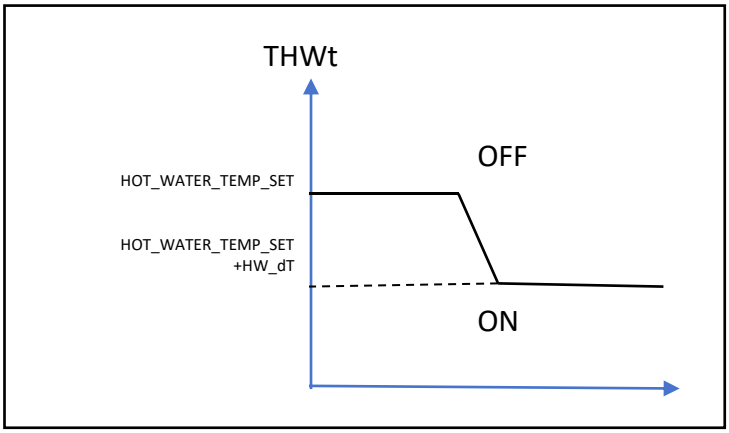

Note：

Twin: Heat pump inlet water temperature

Twout: Heat pump outlet water temperature

Tact1: Buffer tank top water temperature

THWt: Domestic how water tank temperature

TR: Room temperature

13.2 DHW function

13.2.1 Whether DHW mode is enabled

Set whether to enable the DHW mode through the display. When it is set to enable, the unit can operate according to the control logic of the DHW mode. When the DHW mode is not enabled, the unit will turn off the hot water function.

13.2.2 Whether DHW PRIORITY is enabled

When both the DHW mode and Cooling/Heating mode are turned on, you can set whether to turn on the DHW priority through the display.

1. If the DHW priority is enabled

When the device starts up for the first time, it will prioritize operating in DHW mode. The switching logic between DHW mode and heating/cooling mode is as follows:

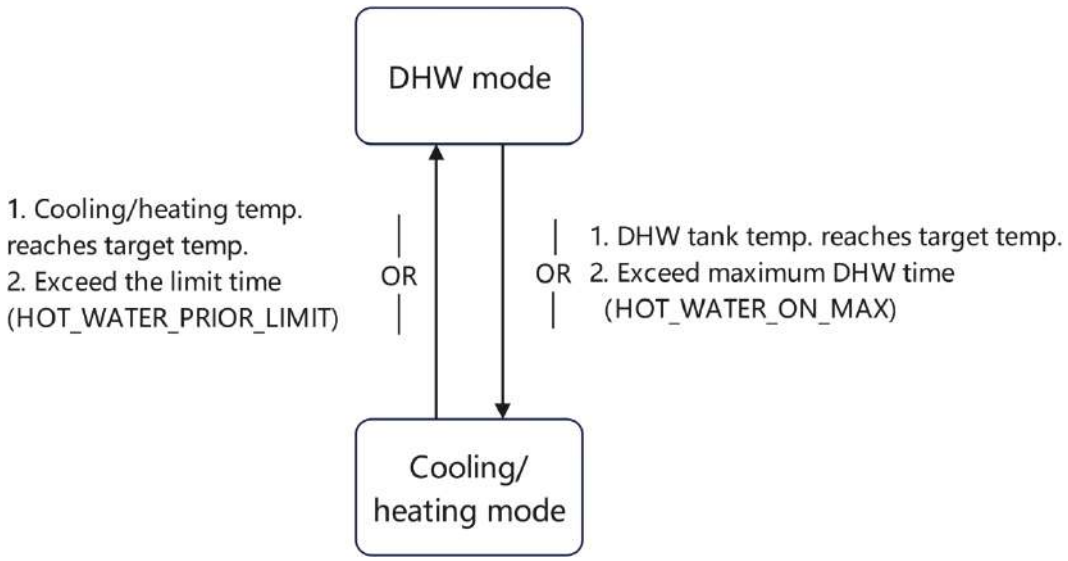

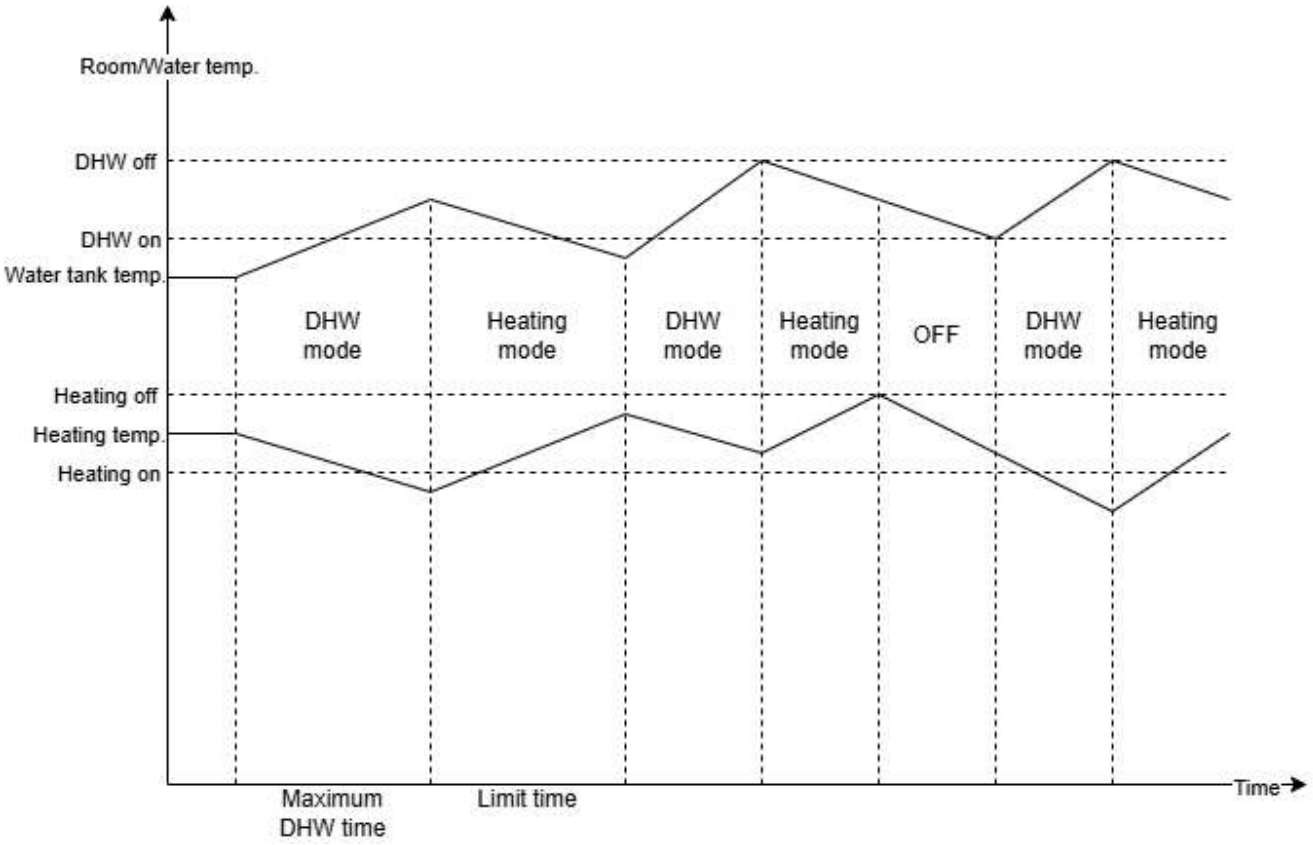

DHW PRIORITY

2. If the DHW priority is not enabled

The heat pump will run the Cooling mode/Heating mode) first. After running until the target temperature is reached, it will switch to DHW mode, and the DHW mode will keep running until the water tank temperature reaching the water tank target temperature or the maximum time is reached, then switch back to the Cooling mode/Heating mode operation

13.2.3 DHW mode ambient restriction

In the DHW mode setting interface, you can set the DHW maximum ambient temperature and the DHW minimum ambient temperature of the heat pump. When the outside ambient temperature＞the DHW maximum ambient temperature, or＜the DHW minimum ambient temperature, only the water tank electric heater is turned on to produce hot water.

And only When the outside ambient temperature＞the DHW minimum ambient temperature and＜the DHW maximum ambient temperature, the heat pump will produce hot water

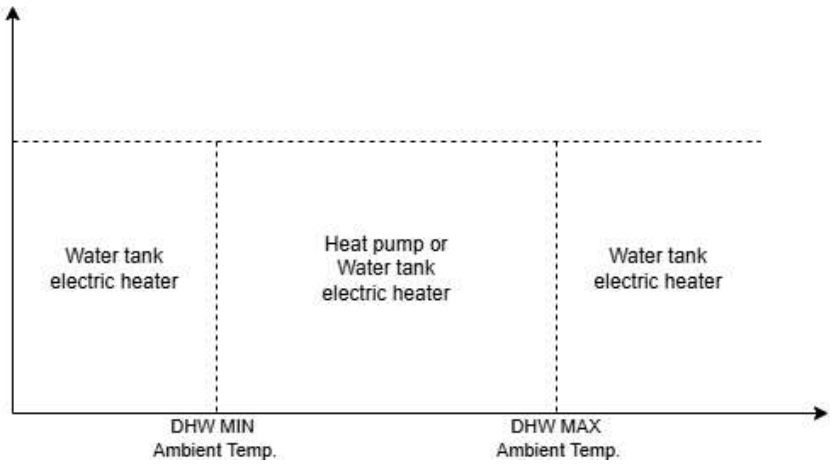

13.3 Cooling function

13.3.1 Whether cooling mode is enabled

Set whether to enable the cooling mode through the display. When it is set to enable, the unit will operate cooling mode.

When the cooling mode is set to be disabled, the unit will turn off cooling function.

13.3.2 Cooling mode ambient restriction

In the Cooling mode setting interface, you can set the Cooling maximum ambient temperature and the Cooling minimum ambient temperature of the heat pump. When the outside ambient temperature＞the Cooling maximum ambient temperature, or＜the Cooling minimum ambient temperature, the unit can not turn on to cool the water.

And only when the outside ambient temperature＞the Cooling minimum ambient temperature and＜the Cooling maximum ambient temperature, the heat pump will produce cool water

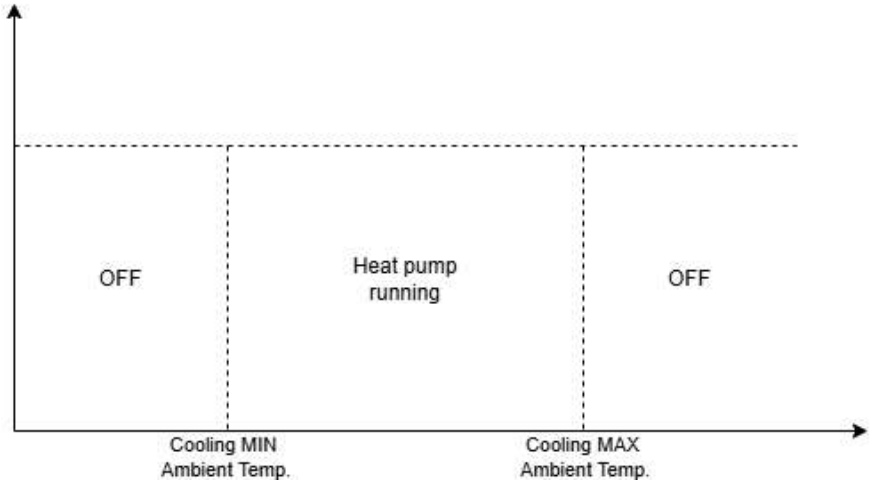

13.3.3 Cooling on/off operation

In cooling mode, when the outlet water temperature reaches (target water temperature - [COOL_UNLOAD_dT]), the heat pump is stopped and only the water pump is turned on; When it is detected that the outlet water temperature reaches (target water temperature + [COOL_LOAD_dT]), the heat pump is turned on for cooling operation

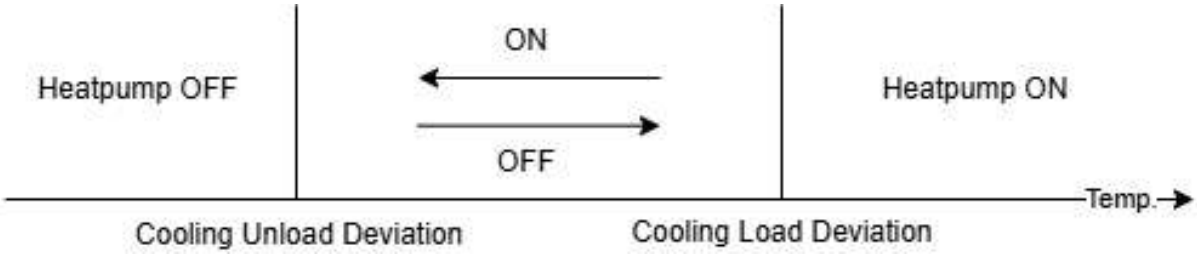

13.4 Heating function

13.4.1 Whether heating mode is enabled

Set whether to enable the heating mode through the display. When it is set to enable, the unit will operate heating mode. When the heating mode is set to be disabled, the unit will turn off heating function.

13.4.2 Heating mode ambient restriction

In the heating mode setting interface, you can set the heating maximum ambient temperature and the heating minimum ambient temperature of the heat pump. When the outside ambient temperature ＞the heating maximum ambient temperature, or＜the heating minimum ambient temperature, only the electric heater is turned on to produce hot water.

And only when the outside ambient temperature ＞ the heating minimum ambient temperature and＜the heating maximum ambient temperature, the heat pump will produce hot water again

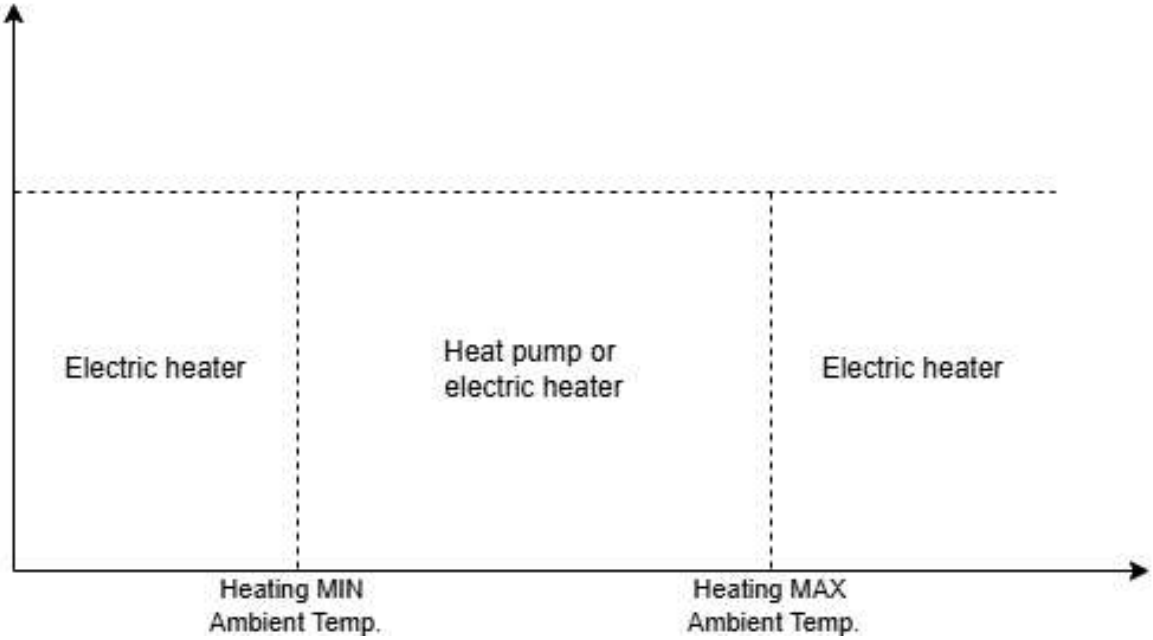

13.4.3 Heating on/off operation

In heating mode, when the outlet water temperature reaches (target water temperature + [HEAT_UNLOAD_dT]), the heat pump is stopped and only the water pump is turned on; When it is detected that the outlet water temperature reaches (target water temperature - [HEAT_LOAD_dT]), the heat pump is turned on for heating operation

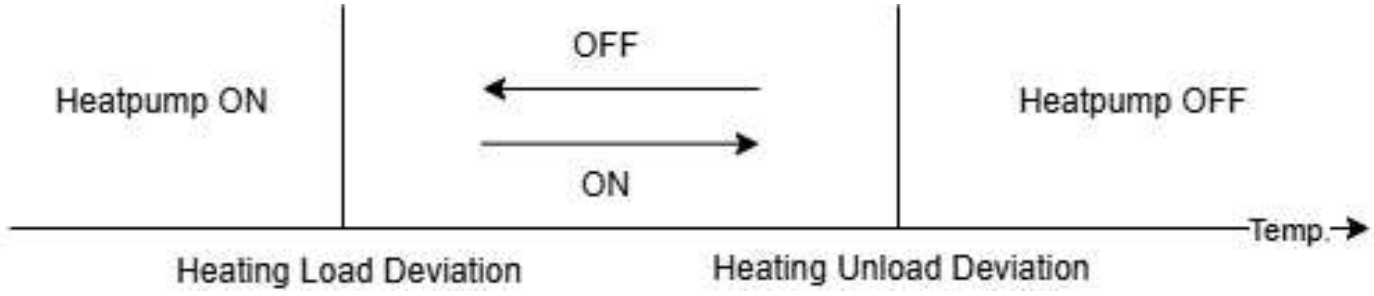

13.5 Automatic function

When the user selects the automatic mode, the operation mode is automatically switched according to the Minimum Ambient Temperature for Automatic Cooling and Maximum Ambient Temperature for Automatic Heating.

When the outdoor ambient temperature <TA_auto_ht_max-1, the heat pump operates in the heating mode, and when the outdoor ambient temperature>TA_auto_cl_min+1, the heat pump operates in the cooling mode.

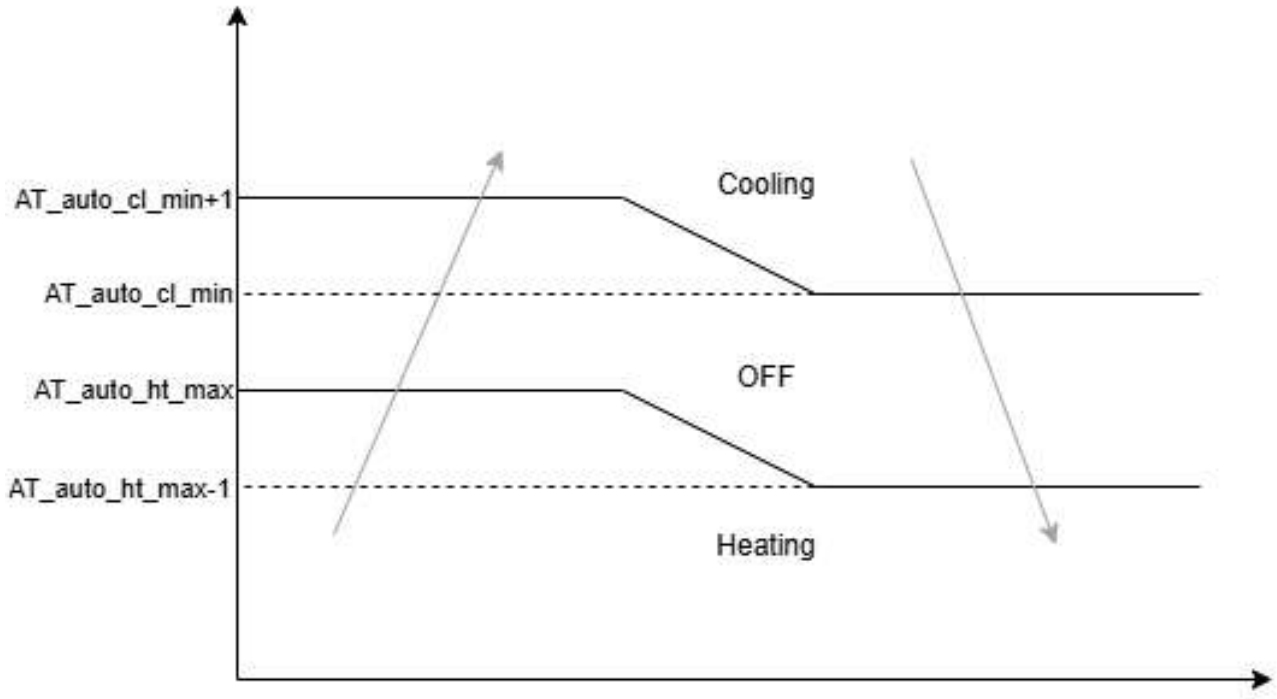

Note:

TA_auto_cl_min：Minimum Ambient Temperature for Automatic Cooling

TA_auto_ht_max：Maximum Ambient Temperature for Automatic Heating

13.6 External heat source control logic

Prerequisites:

[TWout3_SENSOR] set to "Enable"

Either of the following conditions must be met:

①Unit is in heating mode and [External Heat Source] is set to "Heating" or "Heating & Hot Water"

②Unit is in DHW mode and [External Heat Source] is set to "DHW" or "Heating & DHW"

Hot water tank electric heater is in off state

System total outlet temperature < 80℃

Heating Operation Control

When ambient temperature < [External Heat Source Activation Ambient Temperature] - 2, system total outlet water temperature < target temp. - HEAT_LOAD_dT, and external heat source shutdown duration exceeds [External Heat Source Activation Delay], the heat pump will activate the external heat source.

And the external heat source remains active until either the system total outlet water temperature reaches target temp. + HEAT_UNLOAD_dT or ambient temperature reaches [External Heat Source Activation Ambient Temperature].

If the compressor is in a state where it cannot be started (start-up restricted or in failure),
the external heat source may be activated only when the system total outlet water temperature < target temp. - HEAT_LOAD_dT and the external heat source shutdown duration exceeds 5 minutes.
The external heat source remains active until the system total outlet water temperature reaches target temp. + HEAT_UNLOAD_dT or 80°C

DHW Operation Control

When hot water tank temperature < 40℃, system total outlet water temperature < 80℃, and external heat source shutdown duration exceeds [External Heat Source Activation Delay], the heat pump will activate the external heat source.
And the external heat source remains active until either the system total outlet water temperature reaches 80℃ or the hot water tank temperature reaches the target.

If the compressor is in a state where it cannot be started (start-up restricted or in failure),
the external heat source may be activated only when the hot water tank temperature < target temperature-[HW_dT], system total outlet water temperature < 80℃ and the external heat source shutdown duration exceeds 5 minutes.
The external heat source remains active until either the system total outlet water temperature reaches 80℃ or the hot water tank temperature reaches the target.

13.7 Electric heater control logic

13.7.1 Auxiliary electric heater control logic

Prerequisites:

Either of the following conditions must be met:
①Unit is in heating mode and [Auxiliary Electric Heater] is set to "Heating" or "Heating & Hot Water"
②Unit is in DHW mode and [Auxiliary Electric Heater] is set to "DHW" or "Heating & DHW"
Hot water tank electric heater is in off state
If [TWout3_SENSOR] is set to "Enable", System total outlet temperature < 80℃

Heating Operation Control

When ambient temperature < [Auxiliary Electric Heater Activation Ambient Temperature] - 1, heat pump control temperature < target temp. - HEAT_LOAD_dT, and auxiliary electric heater shutdown duration exceeds [Auxiliary Electric Heater Activation Delay], the heat pump will activate the auxiliary electric heater.
And the auxiliary electric heater remains active until either the heat pump control temperature reaches target temp. + HEAT_UNLOAD_dT or ambient temperature reaches [Auxiliary Electric Heater Activation Ambient Temperature].

If the compressor is in a state where it cannot be started (start-up restricted or in failure),
the auxiliary electric heater may be activated only when the heat pump control temperature < target temp. - HEAT_LOAD_dT.
The auxiliary electric heater remains active until the heat pump control temperature reaches target temp. + HEAT_UNLOAD_dT.

DHW Operation Control

When hot water tank temperature < 40℃, and DHW mode operation time exceeds [Auxiliary Electric Heater Activation Ambient Temperature], the heat pump will activate the auxiliary electric heater.
And the auxiliary electric heater remains active until the hot water tank temperature reaches the target.

If the compressor is in a state where it cannot be started (start-up restricted or in failure),
the auxiliary electric heater may be activated only when the hot water tank temperature < target temperature-[HW_dT].
The auxiliary electric heater remains active until the hot water tank temperature reaches the target.

Electric heater level control

When you connect two auxiliary electric heaters, they will activate in the sequence described below.

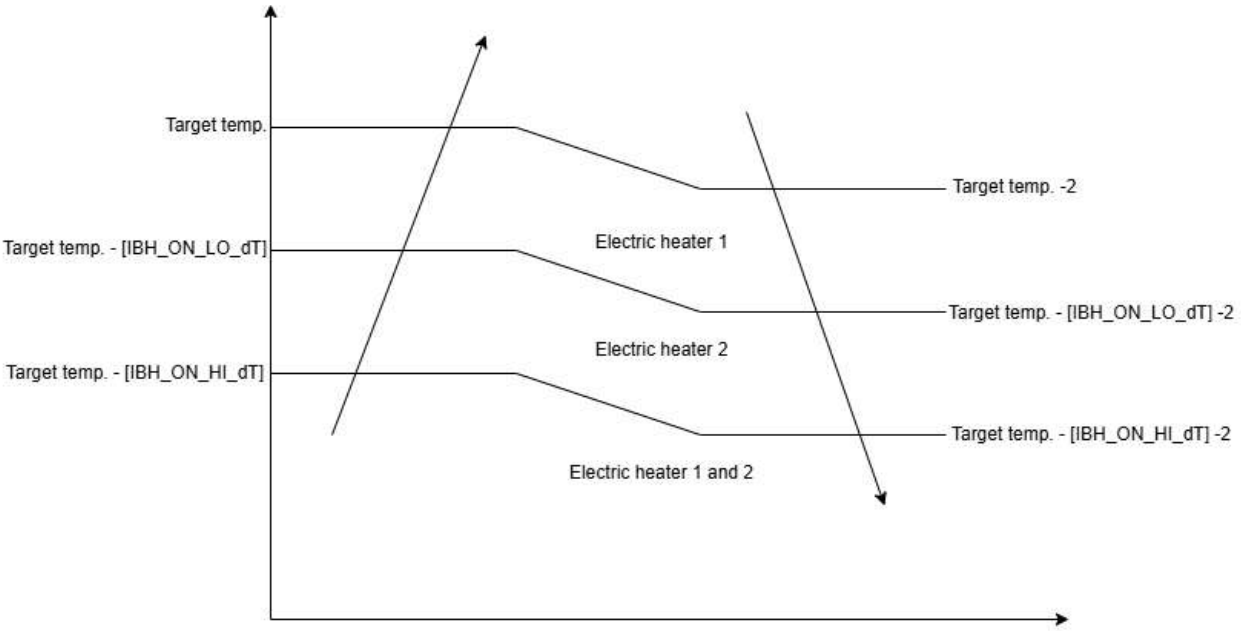

Anti-freeze Operation Control

When auxiliary electric heater is required for anti-freeze protection, the auxiliary electric heater must be activated; otherwise, no activation is needed.

Defrost Operation Control

When no system total outlet temperature fault occurs, the following control logic exists,

The auxiliary electric heater requires activation when all the following conditions are met:

The unit is defrosting

Total outlet temperature THout2(heat pump+auxiliary electric heater) < 16°C

13.7.2 DHW tank electric heater control logic

Prerequisites:

Current operating mode is DHW Mode,

[DWH tank Electric Heater] is set to "Enabled"

Ambient temperature < [DHW tank Electric Heater Activation Ambient Temperature]

DHW Mode is Priority

When the hot water tank temperature < target temperature - [HW_dT], and the DHW mode operation time exceeds the [DHW Tank Electric Heater Activation Delay], the heat pump will activate the DHW tank electric heater until the hot water tank temperature reaches the target temperature.

If the compressor is in a state where it cannot be started (start-up restricted or in failure),

the DHW tank electric heater may be activated only when the hot water tank temperature < target temperature-[HW_dT].

The DHW tank electric heater remains active until the hot water tank temperature reaches the target or reaches 85℃.

DHW Mode is not Priority

When the hot water tank temperature < target temperature - [HW_dT], the heat pump will activate the DHW tank electric heater until the hot water tank temperature reaches the target temperature.

If the compressor is in a state where it cannot be started (start-up restricted or in failure),
the DHW tank electric heater may be activated only when the hot water tank temperature < target temperature-[HW_dT].
The DHW tank electric heater remains active until the hot water tank temperature reaches the target or reaches 85℃.

Defrost Operation Control

Turn on DHW tank electric heater TBH: Hot water tank temperature < [DHW target temperature] - 1°C
Turn off DHW tank electric heater TBH: Hot water tank temperature ≥ [DHW target temperature]

Rapid DHW Mode Control

Activate the DHW tank electric heater when all the following conditions are met:
①Enter Rapid DHW Mode Control
②Hot water tank temperature < [DHW target temperature] - 1°C
Deactivate the DHW tank electric heater when any of the following conditions is met:
①Hot water tank temperature ≥ [DHW target temperature]
②Received DHW mode shutdown command
③Exiting Rapid hot water mode

Emergency DHW Tank Electric Heater

Activate the DHW tank electric heater when all the following conditions are met:
①DHW mode enabled
②Received emergency DHW tank heater command
③Hot water tank temperature < [DHW target temperature] - 1°C
Deactivate the DHW tank electric heater when any of the following conditions is met:
①Hot water tank temperature ≥ [DHW target temperature]
②Received heat pump shutdown command

13.8 Water pump control logic

13.8.1 Main Circulation Pump(PUMPf) Control

The main circulation pump operates based on the settings for [Hot Water Pump Mode] and [Pump Operation Mode].

The main circulation pump operation mode is selected as follows:

When [Hot Water Pump Mode] is "Disabled":Main Circulation Pump Operation Mode = [Pump Operation Mode]

When [Hot Water Pump Mode] is "Enabled":

- If the unit operates in DHW Mode: Main Circulation Pump Operation Mode = [Hot Water Pump Mode]
- If the unit operates in Heating/Cooling Mode: Main Circulation Pump Operation Mode = [Pump Operation Mode]

When the main circulation pump's operating mode is set to "Keep Running," the pump will run continuously after heat pump off.

When the main circulation pump's operating mode is set to "Interval Operation," the pump will follow this cycle during shutdown: run for 5 minutes, then stop for the [Pump Interval Off Duration] time.

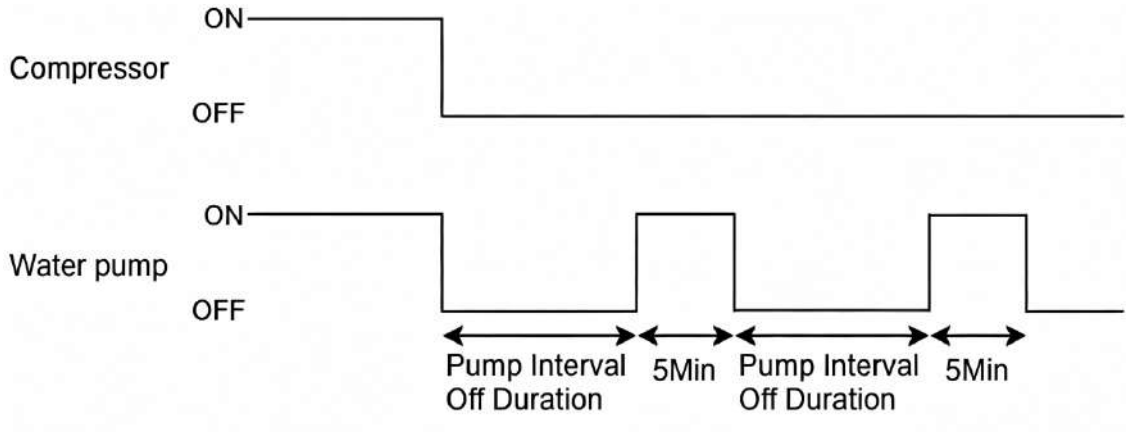

When the main circulation pump operates in "Temperature-to-Stop" mode, it will stop running once the target temperature is reached. If the ambient temperature falls below the pump freeze protection temperature, the pump will activate for 5 minutes, then shut off for [Pump Interval Off Duration] before repeating the cycle.

Note: When the main circulation pump is activated during anti-freeze mode, scheduled sterilization, or commissioning operations, it will remain running continuously and will not be subject to the interval operation or temperature-to-stop restrictions.

13.8.2 Secondary Circulation Pump(PUMPo) Control

When installing a secondary circuit pump, please also fit a buffer tank.

Activate the secondary circulation pump if any of the following conditions is met,

① Heat pump in antifreeze operation

② PUMPo will be starts or stops according to the heating/cooling mode ON OFF

③ In 1 zone room temperature Control, when reach to the setting temperature, PUMPo will also continue operate to keep the room temperature. In this case ,the water temperature will be adjusted automatically according to the room temperature.

④ Manual startup command for trial operation function.

13.8.3 Mixing Pump(PUMPmix) Control

The mixing pump circulates water through the underfloor heating system in Zone B. It will activate during heating, anti-freeze protection, or test operation in Zone B, otherwise remaining off.

13.8.4 DHW Pump Control

Prerequisites:

[DHW Pump] set to ‘Enabled’ and [DHW Function] set to ‘Enabled’

①If [DHW Pump Timer] is set to ‘Enabled’

When the time reaches the user-set DHW pump start time, the DHW pump turns on, runs continuously for a set period, then off.

②If [DHW Pump disinfection] is set to "Enabled"

When the unit enters scheduled disinfection and the DHW tank temperature reaches the disinfection temperature minus the [HW_dT] (if the unit has no DHW tank electric heater, the DHW tank temperature only needs to reach 58°C), the DHW pump will turn on. It will remain on until the unit exits scheduled disinfection or the DHW pump has run continuously for a set period, at which point it will off.

13.8.5 Solar Water Pump Control

Prerequisites:

[Solar Water Pump] set to "Enable" and [Hot Water Function] set to 'Enable'

①If the [Solar Temperature sensor] is set to "Disabled," the solar pump will activate when a solar signal is detected and the hot water tank temperature is below the target temperature minus the [HW_dT]. The solar pump will remain on until the solar signal is lost or the hot water tank temperature reaches the target temperature

②If the [Solar Temperature Sensor] is set to 'Enabled', the solar pump will activate when the solar temperature reaches the [Solar Pump Activation Temperature], the hot water tank temperature is below the target temperature minus the [HW_dT], and the solar temperature exceeds the hot water tank temperature + 1°C. The solar pump will remain active until the solar temperature falls below the activation temperature minus the [HW_dT], the hot water tank temperature reaches the target temperature, or the solar temperature drops below the hot water tank temperature, at which point the solar pump will deactivate.

13.9 Three way valve control logic

13.9.1 DWH three-way valve control logic

The DHW three-way valve is used to switch between the heating/cooling water circuit and the hot water circuit. Its operating logic is as follows:

When the unit operates in cooling (or heating) mode, the DHW three-way valve maintains an OFF output.

When the unit operates in DHW mode, the DHW three-way valve maintains an ON output.

When the unit triggers defrosting in heating mode, the DHW three-way valve maintains an OFF output.

When the unit triggers defrosting in DHW mode, the DHW three-way valve maintains an ON output.

13.9.2 Cooling three-way valve control logic

The cooling three-way valve is used to switch between heating and cooling water circuits. Its operating logic is as follows:

When the heat pump operates in heating mode, the cooling three-way valve maintains an OFF output.

When the heat pump operates in cooling mode, the cooling three-way valve maintains an ON output

13.9.3 Mixing three-way valve control logic

The mixing three-way valve controls whether hot water flows into the Zone B underfloor heating circuit (to prevent excessive water temperature in Zone B):

When hot water is required for heating in Zone B, the mixing three-way valve maintains an OFF output.

When hot water is not required for heating in Zone B, the mixing three-way valve maintains an ON output.

In Zone B room temperature control, mixing three-way valve will turn OFF when reach to the targeted room temperature.

13.9.4 Mixing valve control logic

If you want to use mixing valve for Zone B underfloor heating circuit, please set [Mixing Valve Function] to "Enabled"

When floor heating inlet temperature ＜ Zone B setting temperature, the mixing valve outputs an ON signal to increase hot water flow.

When floor heating inlet temperature ≥ Zone B setting temperature - [FLH_WATER_dT], the mixing valve outputs an OFF signal to decrease hot water flow.

In Zone B room temperature control, mixing valve will be controlled by the room temperature change rate.

13.10 Others

13.10.1 Scheduled disinfection function

Prerequisites:

Both [Hot Water Function] and [Scheduled Disinfection Function] must be set to "Enabled"

When the current time reaches the user-set "disinfection time point" or disinfection is triggered by the holiday away mode, the unit will activate high-temperature hot water production for disinfection:

Stage 1: The unit will activate the compressor and auxiliary electric heater to heat water for disinfection until the hot water tank reaches the disinfecting temperature. The compressor will then shut off, entering Stage 2. If the compressor is unavailable, the unit will proceed directly to Stage 2.

Stage 2: The unit will activate auxiliary electric heater to disinfect the hot water tank. For the operation logic, refer to the corresponding section on auxiliary electric heater.

After continuous hot water disinfection for a period, the unit will exit the disinfection mode.

During floor heating preheating/floor heating drying periods, scheduled disinfection is not performed.

13.10.2 Holiday away mode

Set the start and end dates for the holiday away mode via the display. During the holiday away period, the unit operates heating/hot water functions at a lower target water temperature to meet water circuit antifreeze and energy-saving requirements. If the unit has a timed disinfection function, it will perform a single disinfection only on the final day of the holiday away period.

When receiving a command to deactivate holiday away mode or the holiday away mode ends, the unit exits holiday away mode and returns to normal operation.

13.10.3 Holiday stay mode

Set the start date and end date for Holiday Stay Mode, and configure the scheduled time periods/operating modes via the display. During the period of holiday stay, the unit will start and stop daily according to the preset time periods and operating modes.

When the unit receives a command to disable holiday stay mode from the display or when holiday stay mode ends, it exits holiday away mode and returns to normal operation.

Holiday away mode and holiday stay mode are mutually exclusive and cannot run simultaneously. Holiday away mode has higher priority than holiday stay mode.

13.10.4 Crankcase electric heater control

Control Logic

If the compressor is not running, and the ambient temperature is < [Crankcase Heater On Ambient Temperature] , the unit will activate the crankcase electric heater.

If the compressor is running, or the ambient temperature is ≥ [Crankcase Heater Off Ambient Temperature] , the unit will deactivate the crankcase electric heater.

Crankcase Electric Heater Preheating Function

After system powers on, if ambient temperature < [Crankcase Electric Heater Activation Ambient Temperature] and unit power-off duration > [Minimum Preheat Power-Off Duration], the unit will enter preheating mode.

During preheating, the unit cannot be started but will retain startup commands. It will automatically start upon reaching the preheating duration based on the stored command.

When the system is in preheating mode during startup, you may select either Normal Preheat or Quick Preheat based on the prompts:

Normal Preheat: Preheat time = (Unit power-off duration - [Minimum Preheat Power-off]) / ([Maximum Preheat Power-off] - [Minimum Preheat Power-off]) × ([Maximum Preheat Time] - [Minimum Preheat Time]) + [Minimum Preheat Time]

Quick Preheat: Preheat time = [Minimum Preheat Duration]

13.10.5 Bottom electric heater control

When [Bottom Electric Heater Mode] is set to "Defrost Bottom Electric Heater":

During defrosting:

When ambient temperature ≤ [Bottom Heater Activation Ambient Temperature], the Bottom electric heater will activate.

When ambient temperature > [Bottom Heater Activation Ambient Temperature] + 2, the Bottom electric heater will deactivate.

After defrosting: The Bottom electric heater will deactivate after a 360-second delay.

When [Bottom Electric Heating Mode] is set to "Low Ambient Temperature Bottom Electric Heater":

When the compressor is running:

- If ambient temperature ≤ [Bottom Electric Heater Ambient Temperature], the Bottom electric heater will turn on.
- If ambient temperature > [Bottom Electric Heater Ambient Temperature] + 2, the Bottom electric heater will turn off.

When the compressor is off: After waiting 360 seconds, the Bottom electric heater will turn off.

13.10.6 Water circuit anti-freeze function

Water circuit anti-freeze entry/exit temperature confirmed

Water circuit anti-freeze entry temperature must be selected as the lowest value among the following:

Heat pump inlet temperature

Heat pump outlet temperature

Buffer tank temperature

Hot water tank temperature

Water circuit anti-freeze exit temperature must be selected as the lowest value among the following:

Heat pump inlet temperature

Heat pump outlet temperature

Water circuit anti-freeze exit temperature detection

When ambient temperature ≥[Anti-Freeze Interval Ambient Temperature], Standby Anti-freeze Interval＝[Anti-Freeze Interval 1]

When ambient temperature <[Anti-Freeze Interval Ambient Temperature], Standby Anti-freeze Interval =[Anti-Freeze Interval 2]

When the ambient temperature is ≦ [Anti-Freeze Entry Ambient Temperature] and the main circulation pump has been stopped for [Standby Anti-Freeze Interval], the main circulation pump will be started. After the main circulation runs for 180 seconds, the system will detect the water circuit anti-freeze exit temperature

Load Operation During Anti-Freeze Protection

If Ambient temperature ≤ [Anti-Freeze Entry Ambient Temperature], or Water circuit anti-freeze entry temperature ≤ [Pump Anti-Freeze Temperature], the unit will only activate the main circulation pump.

If Water circuit anti-freeze entry temperature ≤ [Electric Heater Anti-Freeze Temperature], the unit will activate the auxiliary electric heater.

If Water circuit anti-freeze entry temperature ≤ [Compressor Anti-Freeze Temperature], the heat pump will run in heating/DHW mode

Load Operation Exit Anti-Freeze Protection

When the water circuit anti-freeze exit temperature exceeds [Compressor Anti-Freeze Exit Temperature] + 5°C, anti-freeze protection is immediately deactivated.

When the ambient temperature exceeds [Anti-Freeze Entry Ambient Temperature] + [Anti-Freeze Exit Ambient Temperature Difference], anti-freeze protection is immediately deactivated.

When the ambient temperature is ≤ [Anti-Freeze Entry Ambient Temperature] + [Anti-Freeze Exit Ambient Temperature Difference] or ambient temperature sensor failure occurs, anti-freeze protection is deactivated according to the following rules:

When water circuit anti-freeze exit temperature > [Pump Anti-Freeze Temperature], exit pump anti-freeze. At this point, the main circulation pump stops running.

When water circuit anti-freeze exit temperature > [Electric Heater Anti-Freeze Exit Temperature], exit electric heater anti-freeze. At

this point, the auxiliary electric heater stops running.

When water circuit anti-freeze exit temperature ＞ [Compressor anti-freeze exit temperature], exit compressor anti-freeze protection. At this point, both the compressor and auxiliary electric heating stop operating, and the main circulation pump shuts off after a 60-second delay.

13.10.7 Anti-freeze function in cooling mode

When the unit operates in cooling mode:

If the heat pump outlet water temperature is < [Cooling Outlet Temperature Limit], the heat pump will be shut down.

If [Cooling Outlet Temperature Limit] < heat pump outlet water temperature < [Cooling Outlet Temperature Limit] + [Outlet Water Load Compensation] + 2°C, operation remains unchanged.

If the heat pump outlet water temperature is > [Cooling Outlet Temperature Limit] + [Outlet Water Load Compensation] + 2°C, the compressor returns to normal operation.

Within 3 minutes of compressor startup, if the anti-freeze temperature is < [Cooling Evaporator Lowest Temperature - 3°C] and remains so for 30 seconds, the compressor will stop.

After 3 minutes of compressor startup, if the anti-freeze temperature is < [Cooling Evaporator Lowest Temperature] and remains so for 30 seconds, the compressor will stop.

When the anti-freeze temperature is > [Cooling Evaporator Lowest Temperature + 2°C], the heat pump will return to normal operation.

13.10.8 Defrost control

Normal defrosting

Normal defrosting startup logic:

The following 5 conditions must all be satisfied simultaneously:

1. For plate heat exchangers, the inlet water temperature and outlet water temperature shall be ≥ the Defrosting temperature = 12 °C.

Objective: To prevent damage to plate heat exchangers caused by ice formation during defrosting in low-temperature environments.

2. Finned surface temperature ≤ [Dfr. coil T] = -1 °C; ambient temperature Ta ≤ [Dfr. Env.T] = 12 °C

Objective: To confirm whether the current heatpump may be experiencing frost formation.

3. Ambient temperature - fin temperature shall be ≥ the Defrosting Env. fin temperature difference = F(Ta).

Objective: To confirm that frost has formed on the heatpump.

4. Compressor operating time > [DFR_comp_on_time] = 5 min

Objective: To confirm that the heatpump has been operating for a period of time.

5. Cumulative frosting operating time ≥ Defrost interval = F(Ta)

Objective: The heatpump should not be subjected to frequent defrosting cycles to avoid adversely affecting the user experience.

After the unit is powered on, the initial defrost wait time for the compressor is [Dfr.interval].

After the first defrosting cycle, the selection of the defrost interval is shown in the figure:

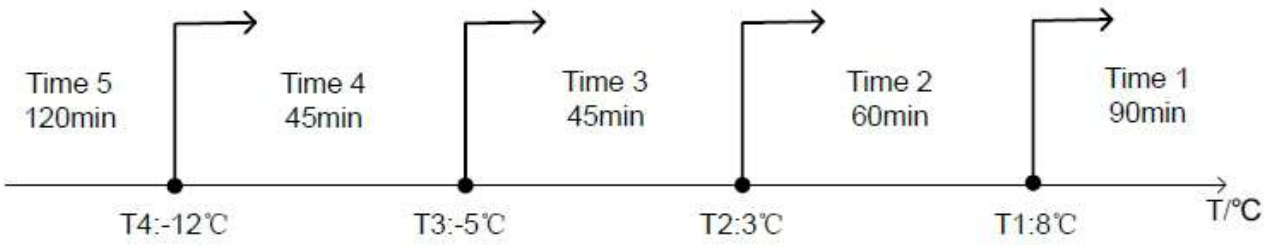

Among them:

Defrosting return temperature = [Dfr.out T] + 6°C

Defrosting env. fin difference = F (Ta)

Defrost interval = F(Ta)

Ta = ambient temperature

Default value: [Dfr.out T] = 6 °C

[Dfr. coil T] = -1°C

[Dfr. Env.T] = 12°C

[DFR_comp_on_time] = 5 minutes

13.10.9 Photovoltaic-linked function

Photovoltaic-linked status selection:

0-SG Ready

1-PV Ready

2-SG Ready & PV Ready

[SG_Ready] Set to "Enable":

Mode	EVU Signal(SG1)	SG Signal(SG2)	Command
SG_Ready1	1	0/1	Smart Grid Directive 1
SG_Ready2	0	0	Smart Grid Directive 2
SG_Ready3	0	1	Smart Grid Directive 3

[PV_Ready]Set to "Enable":

Mode	EVU Signal(SG1)	SG Signal(SG2)	Command
PV_Ready1	1	0/1	Low-Power PV
PV_Ready2	0	0	Mid-Power PV
PV_Ready3	0	1	High-Power PV

PV READY signal is sent by iGARDEN Photovoltic system via WiFi communication. The heat pump then performs logic check and runs the corresponding mode.

When both SG_Ready and PV_Ready occur simultaneously, SG_Ready3 takes priority.

Note:

1. SG1 = Load reduction and power limiting – takes precedence over SG2;
   SG2 = Absorbing excess power (photovoltaic / grid)
2. On the wiring diagram, SG1 corresponds to formerly EVU port; SG2 corresponds to formerly SG port.

14 Technical data

14.1 Refrigerant diagram

Refrigerant piping graphic example:

High temp., high pressure gas

High temp., high pressure liquid

Low temp., low pressure gas liquid mixture

Low temp., low pressure gas

Note: The refrigerant flow direction shown in the figure is the main refrigerant flow direction for reference only.

14.1.1 Heating/DHW Mode

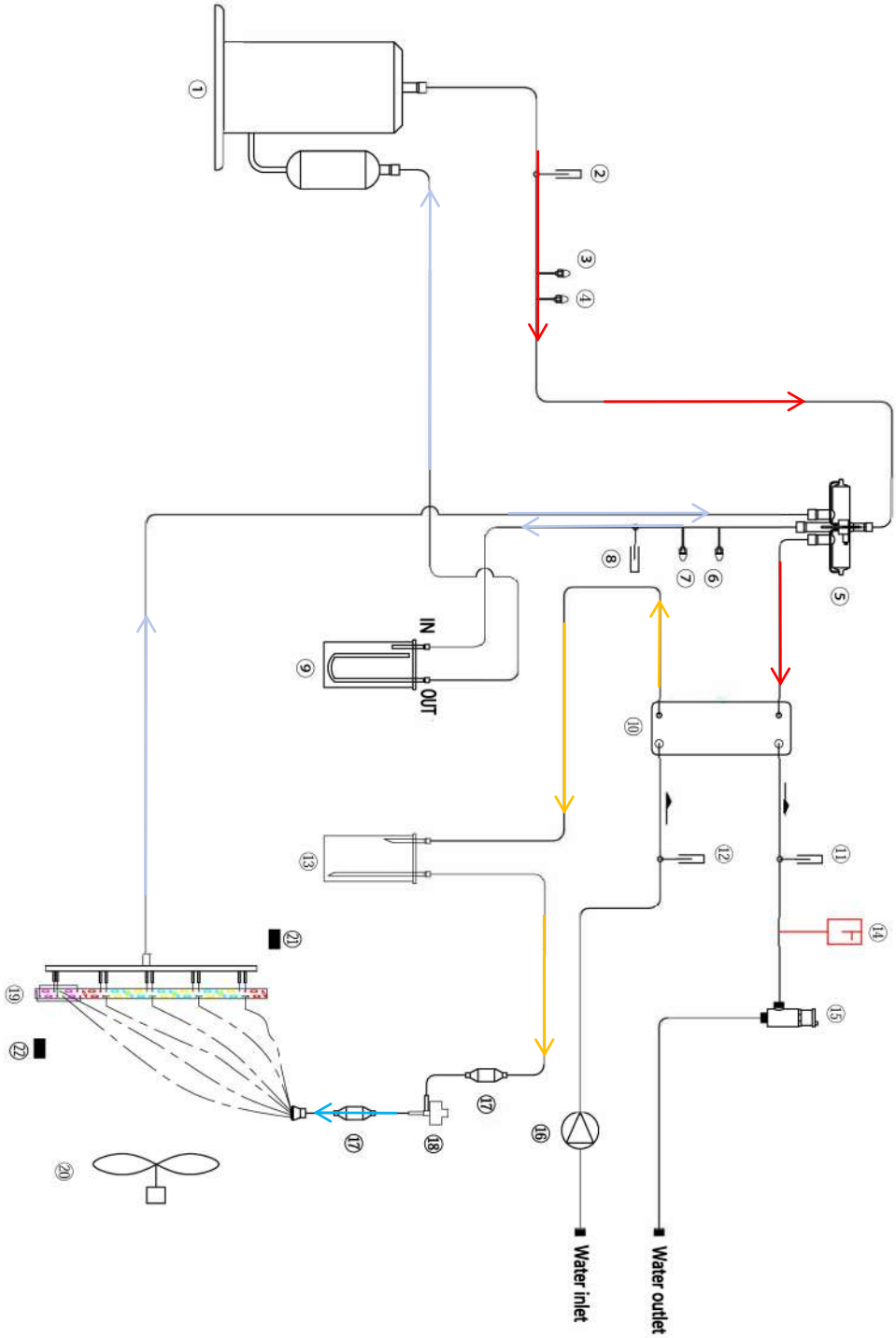

14.1.2 Cooling/Defrosting

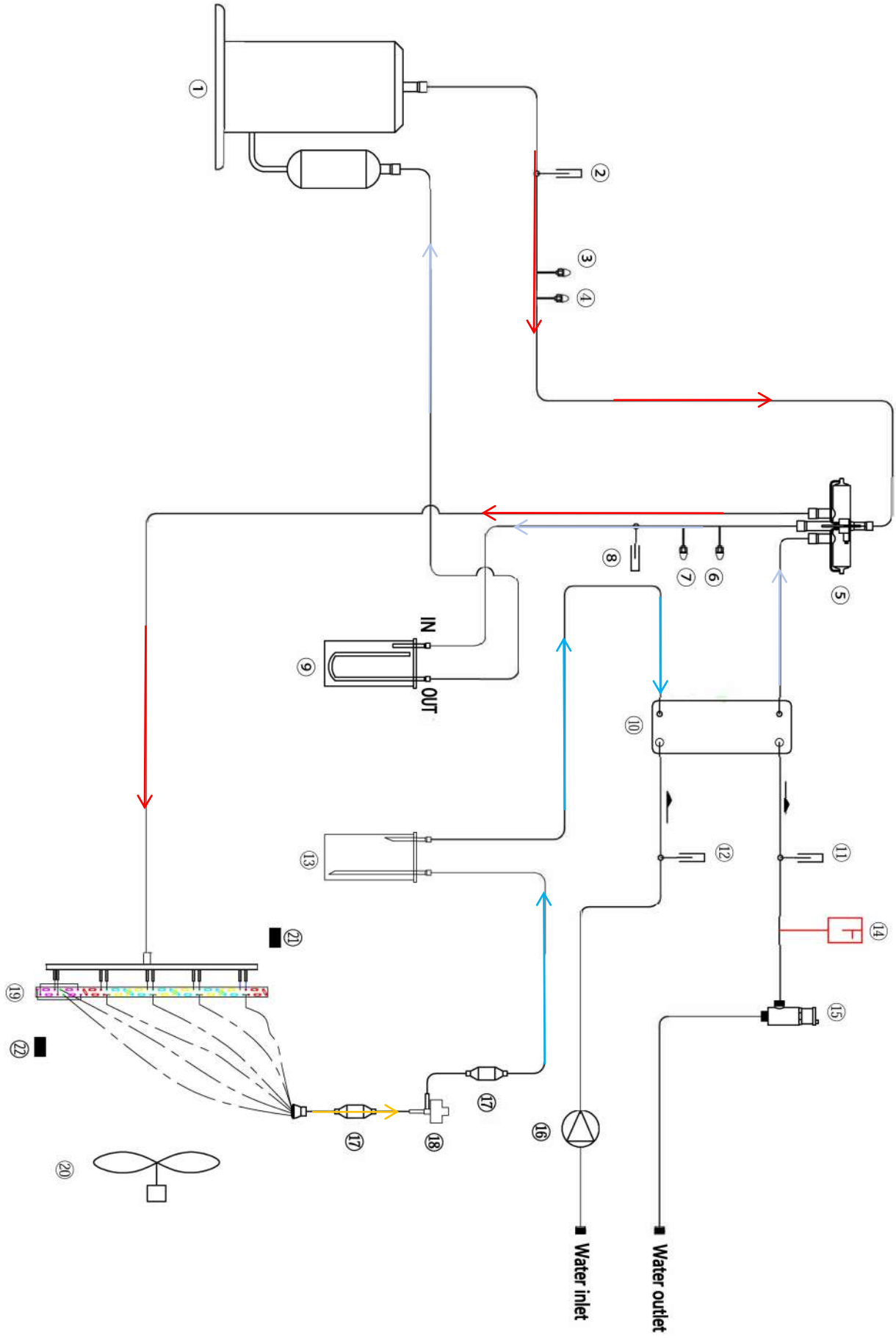

14.1.3 Key components

No.	Part name
①	Compressor
②	Temperature sensor (Compressor exhaust temperature)
③	High pressure switch
④	High pressure sensor
⑤	4-way valve
⑥	Low pressure switch
⑦	Low pressure sensor
⑧	Temperature sensor (Compressor suction temperature)
⑨	Gas-liquid separator
⑩	Plate heat exchanger
⑪	Temperature sensor (Water outlet)
⑫	Temperature sensor (Water inlet)
⑬	Refrigerant storage tank
⑭	Flow switch
⑮	Gas separator
⑯	Main circulation pump
⑰	Filter
⑱	Electronic expansion valve(EEV)
⑲	Finned heat exchanger
⑳	Fan
㉑	TA Ambient temperature
㉒	TF Fin temperature

Compressor：

The refrigerant is compressed to very high pressures in the compressor, while its temperature is also raised. When the refrigerant enters a compressor, it is in a gaseous state at low pressure and low temperature and exits the compressor at high pressure and high temperature in a gaseous state.

4-way valve:

To Control refrigerant flow direction. The heat pump has upgraded the default position of 4-way valve , and made it to keep closed in heating mode and keep open in cooling mode. When closed, the air side heat exchanger functions as an evaporator and water side heat exchanger functions as an condenser; when open, the air side heat exchanger functions as an condenser and water side heat exchanger function as an evaporator.

High pressure switch:

To regulate refrigerant system pressure. When refrigerant system pressure rises above the upper limit, the high pressure switch turns off, stopping the compressor.

High pressure sensor:

To monitor the pressure of the high-pressure side in the refrigerant system in real time, convert the pressure signal into an electrical signal and transmit it to the controller. It not only assists in triggering overload protection, but also helps adjust the operating parameters of the system (such as compressor frequency, expansion valve opening).

Low pressure switch:

To monitor the pressure of the low-pressure side in the system. When the pressure drops below the lower limit (e.g., refrigerant leakage), the low pressure switch will cut off the compressor power supply to prevent the compressor from idling and being damaged (due to insufficient lubrication).

Low pressure sensor:

To detect the pressure of the low-pressure side continuously, convert it into an electrical signal and send it to the controller. It provides data support for system adjustment (e.g., regulating refrigerant flow) while cooperating with the low pressure switch to achieve more precise low-pressure protection.

Fan motor

To drive the fan to rotate. On the condenser side, it accelerates air flow to help the refrigerant dissipate heat and condense; on the evaporator side, it promotes air circulation to enhance the refrigerant's evaporation and heat absorption. Its rotation speed can be adjusted according to pressure/temperature signals (e.g., increasing speed when the high pressure is too high) to improve heat exchange efficiency.

Air side heat exchanger(Finned heat exchanger):

To transfer heat between refrigerant and air. Refrigerant passes through the tube coils, conducts heat to the fins and dissipates heat to air forced through the heat exchanger.

Filter:

To protect the inside of the heat pump from the dust and other contaminants that are found in the air, including hairs, pet dander and fibres. As the air passes through the filter, this dust and dirt gets caught to stop it from entering different parts of the system.

Electronic expansion valve (EEV):

To Control refrigerant flow and reduces refrigerant pressure.

Refrigerant storage tank:

To hold excess fluid refrigerant when the system is in operation.

Plate heat exchanger:

To transfer heat between two fluids. This has a major advantage over a conventional heat exchanger in that the fluids are exposed to a much larger surface area because the fluids are spread out over the plates. This facilitates the transfer of heat, and greatly increases the speed of the temperature change.

Water pump (Circulating pump):

To Circulate water in the water circuit.

Water flow switch:

To detect water flow rate to protect compressor and water pump in the event of insufficient water flow.

Gas separator

It can vent air from the water circuit. Crucially, when refrigerant leaks into the water circuit, it can exhaust the refrigerant from the water to the outdoors, preventing it from entering the indoor space and reducing safety risks.

14.2 Electronic system

14.2.1 Electric wiring diagram

iGXC08

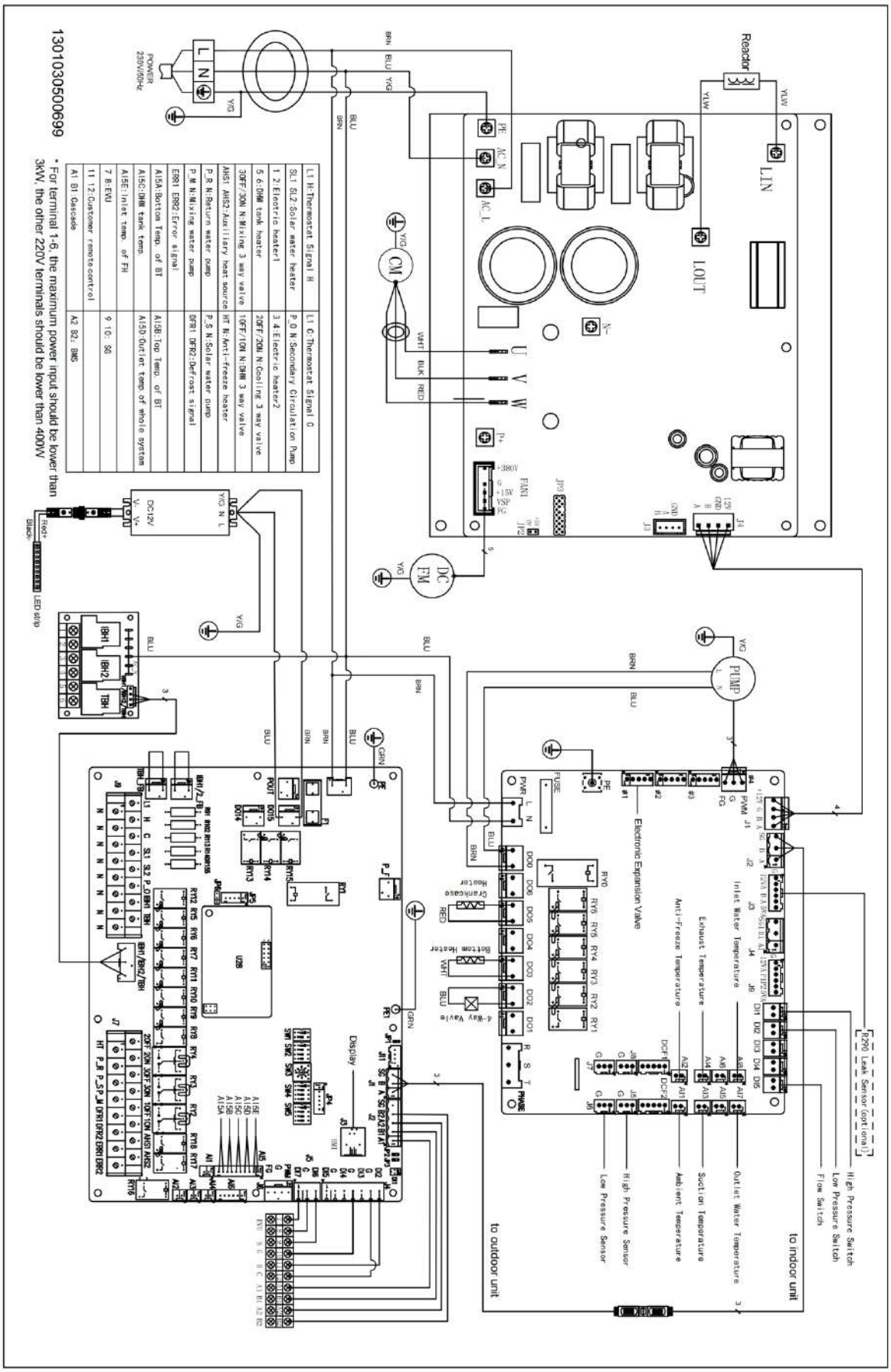

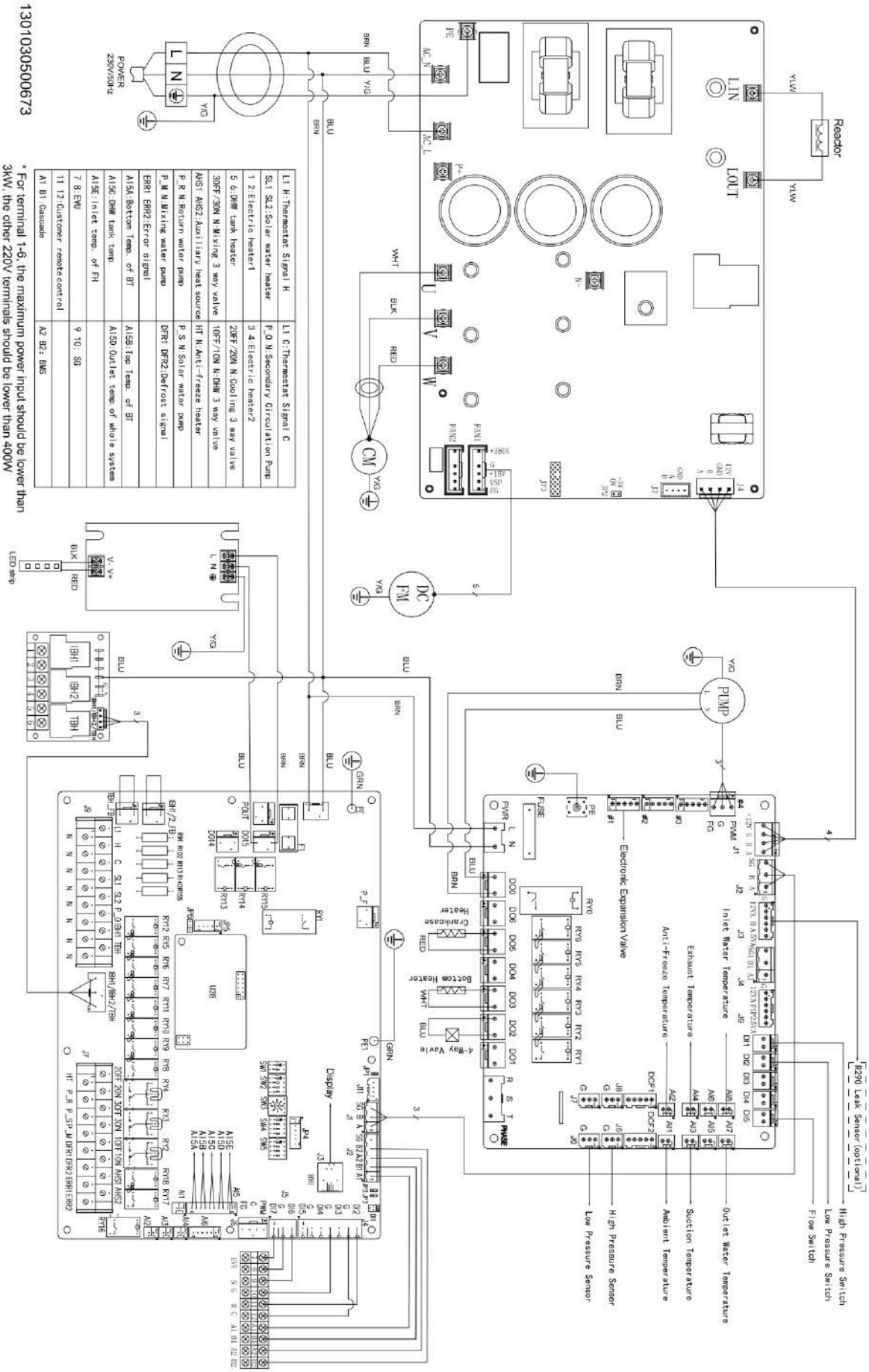
1301030500673
POWER 230V/50Hz
L
N
Reador
YLW
LIN
LOUT
PE
AC_N
AC_L
P-
N-
U
V
W
CM
FM
DC
PUMP
YHT
BLK
RED
YG
BRN
BLU
GRN
FAN1
FAN2
+380V
+5V
+12V
PWM
J1
J2
J3
J4
J5
J6
J7
J8
J9
Inlet Water Temperature
Exhaust Temperature
Anti-Freeze Temperature
Electronic Expansion Valve
Crankcase Heater
Bottom Heater
4-Way Vavle
Display
FUSE
PWR
PHASE
R
S
T
DO1
DO2
DO3
DO4
DO5
DO6
RY0
RY1
RY2
RY3
RY4
RY5
RY6
DI1
DI2
DI3
DI4
DI5
DCF1
DCF2
A1
A2
A3
A4
A5
A6
A7
A8
IBH1
IBH2
TBH
BH1/2_FB
TBH_FB
P_F
P_R
P_SP_M
DFR1
DFR2
ERR1
ERR2
AUX1
AUX2
20FF
20N
30FF
30N
10FF
10N
HT
SG
SL1
SL2
P_O
U28
SW1
SW2
SW3
SW4
SW5
JP1
JP2
JP3
JP4
JP5
JP6
JP7
JP8
JP9
JP10
JP11
JP12
JP13
JP14
JP15
JP16
JP17
JP18
JP19
JP20
JP21
JP22
JP23
JP24
JP25
JP26
JP27
JP28
JP29
JP30
JP31
JP32
JP33
JP34
JP35
JP36
JP37
JP38
JP39
JP40
JP41
JP42
JP43
JP44
JP45
JP46
JP47
JP48
JP49
JP50
JP51
JP52
JP53
JP54
JP55
JP56
JP57
JP58
JP59
JP60
JP61
JP62
JP63
JP64
JP65
JP66
JP67
JP68
JP69
JP70
JP71
JP72
JP73
JP74
JP75
JP76
JP77
JP78
JP79
JP80
JP81
JP82
JP83
JP84
JP85
JP86
JP87
JP88
JP89
JP90
JP91
JP92
JP93
JP94
JP95
JP96
JP97
JP98
JP99
JP100
JP101
JP102
JP103
JP104
JP105
JP106
JP107
JP108
JP109
JP110
JP111
JP112
JP113
JP114
JP115
JP116
JP117
JP118
JP119
JP120
JP121
JP122
JP123
JP124
JP125
JP126
JP127
JP128
JP129
JP130
JP131
JP132
JP133
JP134
JP135
JP136
JP137
JP138
JP139
JP140
JP141
JP142
JP143
JP144
JP145
JP146
JP147
JP148
JP149
JP150
JP151
JP152
JP153
JP154
JP155
JP156
JP157
JP158
JP159
JP160
JP161
JP162
JP163
JP164
JP165
JP166
JP167
JP168
JP169
JP170
JP171
JP172
JP173
JP174
JP175
JP176
JP177
JP178
JP179
JP180
JP181
JP182
JP183
JP184
JP185
JP186
JP187
JP188
JP189
JP190
JP191
JP192
JP193
JP194
JP195
JP196
JP197
JP198
JP199
JP200
JP201
JP202
JP203
JP204
JP205
JP206
JP207
JP208
JP209
JP210
JP211
JP212
JP213
JP214
JP215
JP216
JP217
JP218
JP219
JP220
JP221
JP222
JP223
JP224
JP225
JP226
JP227
JP228
JP229
JP230
JP231
JP232
JP233
JP234
JP235
JP236
JP237
JP238
JP239
JP240
JP241
JP242
JP243
JP244
JP245
JP246
JP247
JP248
JP249
JP250
JP251
JP252
JP253
JP254
JP255
JP256
JP257
JP258
JP259
JP260
JP261
JP262
JP263
JP264
JP265
JP266
JP267
JP268
JP269
JP270
JP271
JP272
JP273
JP274
JP275
JP276
JP277
JP278
JP279
JP280
JP281
JP282
JP283
JP284
JP285
JP286
JP287
JP288
JP289
JP290
JP291
JP292
JP293
JP294
JP295
JP296
JP297
JP298
JP299
JP300
JP301
JP302
JP303
JP304
JP305
JP306
JP307
JP308
JP309
JP310
JP311
JP312
JP313
JP314
JP315
JP316
JP317
JP318
JP319
JP320
JP321
JP322
JP323
JP324
JP325
JP326
JP327
JP328
JP329
JP330
JP331
JP332
JP333
JP334
JP335
JP336
JP337
JP338
JP339
JP340
JP341
JP342
JP343
JP344
JP345
JP346
JP347
JP348
JP349
JP350
JP351
JP352
JP353
JP354
JP355
JP356
JP357
JP358
JP359
JP360
JP361
JP362
JP363
JP364
JP365
JP366
JP367
JP368
JP369
JP370
JP371
JP372
JP373
JP374
JP375
JP376
JP377
JP378
JP379
JP380
JP381
JP382
JP383
JP384
JP385
JP386
JP387
JP388
JP389
JP390
JP391
JP392
JP393
JP394
JP395
JP396
JP397
JP398
JP399
JP400
JP401
JP402
JP403
JP404
JP405
JP406
JP407
JP408
JP409
JP410
JP411
JP412
JP413
JP414
JP415
JP416
JP417
JP418
JP419
JP420
JP421
JP422
JP423
JP424
JP425
JP426
JP427
JP428
JP429
JP430
JP431
JP432
JP433
JP434
JP435
JP436
JP437
JP438
JP439
JP440
JP441
JP442
JP443
JP444
JP445
JP446
JP447
JP448
JP449
JP450
JP451
JP452
JP453
JP454
JP455
JP456
JP457
JP458
JP459
JP460
JP461
JP462
JP463
JP464
JP465
JP466
JP467
JP468
JP469
JP470
JP471
JP472
JP473
JP474
JP475
JP476
JP477
JP478
JP479
JP480
JP481
JP482
JP483
JP484
JP485
JP486
JP487
JP488
JP489
JP490
JP491
JP492
JP493
JP494
JP495
JP496
JP497
JP498
JP499
JP500
JP501
JP502
JP503
JP504
JP505
JP506
JP507
JP508
JP509
JP510
JP511
JP512
JP513
JP514
JP515
JP516
JP517
JP518
JP519
JP520
JP521
JP522
JP523
JP524
JP525
JP526
JP527
JP528
JP529
JP530
JP531
JP532
JP533
JP534
JP535
JP536
JP537
JP538
JP539
JP540
JP541
JP542
JP543
JP544
JP545
JP546
JP547
JP548
JP549
JP550
JP551
JP552
JP553
JP554
JP555
JP556
JP557
JP558
JP559
JP560
JP561
JP562
JP563
JP564
JP565
JP566
JP567
JP568
JP569
JP570
JP571
JP572
JP573
JP574
JP575
JP576
JP577
JP578
JP579
JP580
JP581
JP582
JP583
JP584
JP585
JP586
JP587
JP588
JP589
JP590
JP591
JP592
JP593
JP594
JP595
JP596
JP597
JP598
JP599
JP600
JP601
JP602
JP603
JP604
JP605
JP606
JP607
JP608
JP609
JP610
JP611
JP612
JP613
JP614
JP615
JP616
JP617
JP618
JP619
JP620
JP621
JP622
JP623
JP624
JP625
JP626
JP627
JP628
JP629
JP630
JP631
JP632
JP633
JP634
JP635
JP636
JP637
JP638
JP639
JP640
JP641
JP642
JP643
JP644
JP645
JP646
JP647
JP648
JP649
JP650
JP651
JP652
JP653
JP654
JP655
JP656
JP657
JP658
JP659
JP660
JP661
JP662
JP663
JP664
JP665
JP666
JP667
JP668
JP669
JP670
JP671
JP672
JP673
JP674
JP675
JP676
JP677
JP678
JP679
JP680
JP681
JP682
JP683
JP684
JP685
JP686
JP687
JP688
JP689
JP690
JP691
JP692
JP693
JP694
JP695
JP696
JP697
JP698
JP699
JP700
JP701
JP702
JP703
JP704
JP705
JP706
JP707
JP708
JP709
JP710
JP711
JP712
JP713
JP714
JP715
JP716
JP717
JP718
JP719
JP720
JP721
JP722
JP723
JP724
JP725
JP726
JP727
JP728
JP729
JP730
JP731
JP732
JP733
JP734
JP735
JP736
JP737
JP738
JP739
JP740
JP741
JP742
JP743
JP744
JP745
JP746
JP747
JP748
JP749
JP750
JP751
JP752
JP753
JP754
JP755
JP756
JP757
JP758
JP759
JP760
JP761
JP762
JP763
JP764
JP765
JP766
JP767
JP768
JP769
JP770
JP771
JP772
JP773
JP774
JP775
JP776
JP777
JP778
JP779
JP780
JP781
JP782
JP783
JP784
JP785
JP786
JP787
JP788
JP789
JP790
JP791
JP792
JP793
JP794
JP795
JP796
JP797
JP798
JP799
JP800
JP801
JP802
JP803
JP804
JP805
JP806
JP807
JP808
JP809
JP810
JP811
JP812
JP813
JP814
JP815
JP816
JP817
JP818
JP819
JP820
JP821
JP822
JP823
JP824
JP825
JP826
JP827
JP828
JP829
JP830
JP831
JP832
JP833
JP834
JP835
JP836
JP837
JP838
JP839
JP840
JP841
JP842
JP843
JP844
JP845
JP846
JP847
JP848
JP849
JP850
JP851
JP852
JP853
JP854
JP855
JP856
JP857
JP858
JP859
JP860
JP861
JP862
JP863
JP864
JP865
JP866
JP867
JP868
JP869
JP870
JP871
JP872
JP873
JP874
JP875
JP876
JP877
JP878
JP879
JP880
JP881
JP882
JP883
JP884
JP885
JP886
JP887
JP888
JP889
JP890
JP891
JP892
JP893
JP894
JP895
JP896
JP897
JP898
JP899
JP900
JP901
JP902
JP903
JP904
JP905
JP906
JP907
JP908
JP909
JP910
JP911
JP912
JP913
JP914
JP915
JP916
JP917
JP918
JP919
JP920
JP921
JP922
JP923
JP924
JP925
JP926
JP927
JP928
JP929
JP930
JP931
JP932
JP933
JP934
JP935
JP936
JP937
JP938
JP939
JP940
JP941
JP942
JP943
JP944
JP945
JP946
JP947
JP948
JP949
JP950
JP951
JP952
JP953
JP954
JP955
JP956
JP957
JP958
JP959
JP960
JP961
JP962
JP963
JP964
JP965
JP966
JP967
JP968
JP969
JP970
JP971
JP972
JP973
JP974
JP975
JP976
JP977
JP978
JP979
JP980
JP981
JP982
JP983
JP984
JP985
JP986
JP987
JP988
JP989
JP990
JP991
JP992
JP993
JP994
JP995
JP996
JP997
JP998
JP999
JP1000
R290 Leak Sensor (optional)
High Pressure Switch
Low Pressure Switch
Flow Switch
Outlet Water Temperature
Suction Temperature
Ambient Temperature
High Pressure Sensor
Low Pressure Sensor
L1 H:Thermostat Signal H
L1 C:Thermostat Signal C
SL1 SL2:Solar water heater
P_O N:Secondary Circulation Pump
1 2:Electric heater1
3 4:Electric heater2
5 6:DHW tank heater
20FF/20N N:Cooling 3 way valve
30FF/30N N:Mixing 3 way valve
10FF/10N N:DHW 3 way valve
AUX1 AUX2:Auxiliary heat source
HT N:Anti-freeze heater
P_R N:Return water pump
P_S N:Solar water pump
P_M N:Mixing water pump
DFR1 DFR2:Defrost signal
ERR1 ERR2:Error signal
A15A:Bottom Temp. of BT
A15B:Top Temp. of BT
A15C:DHW tank temp
A15D:Outlet temp. of whole system
A15E:Inlet temp. of FH
7 8:EVU
9 10: SG
11 12:Customer remote control
A1 B1: Cascade
A2 B2: BMS
* For terminal 1-6, the maximum power input should be lower than 3kW, the other 220V terminals should be lower than 400W

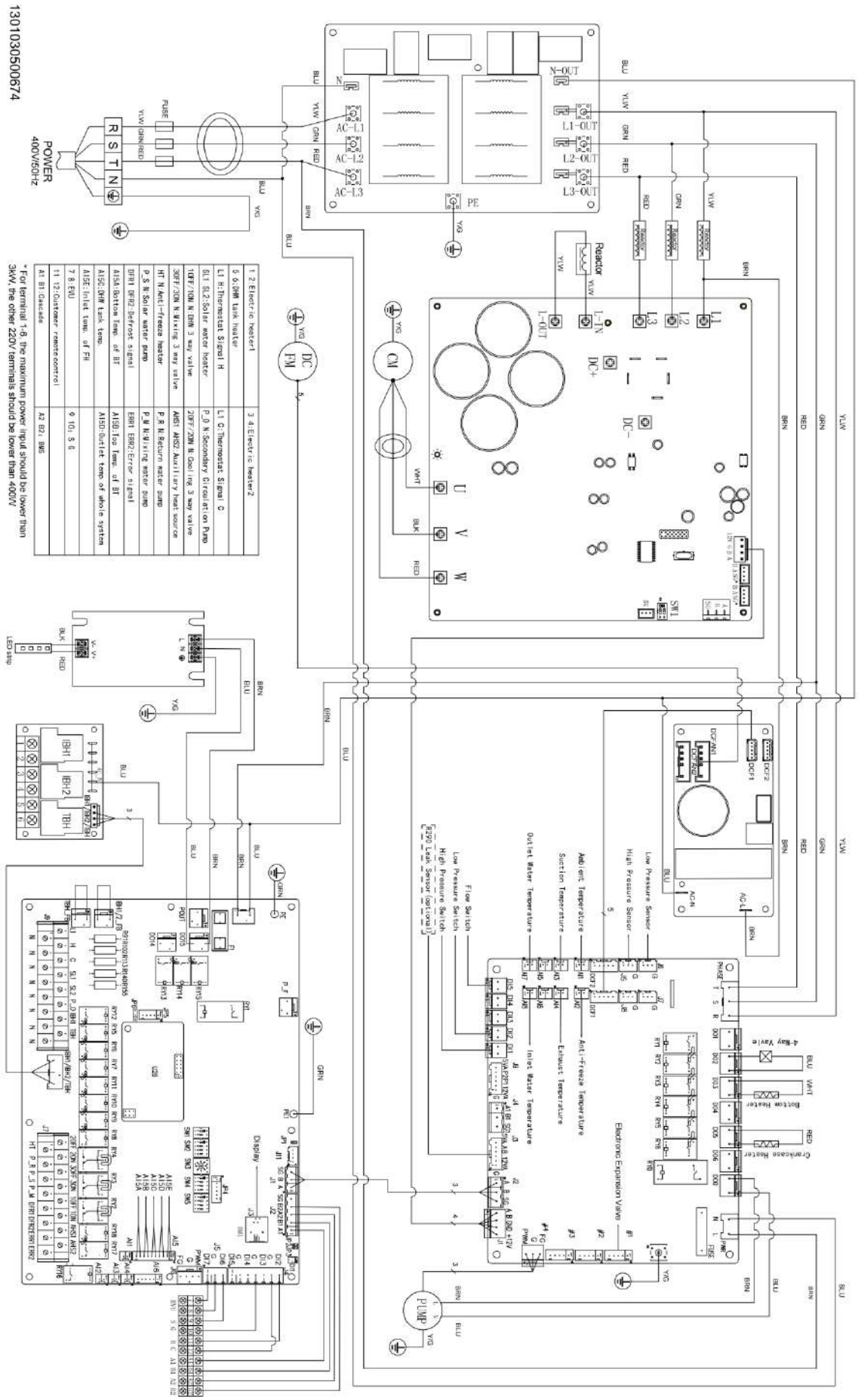
1301030500674
POWER
400V/50Hz
R S T N
FUSE
N-OUT
L1-OUT
L2-OUT
L3-OUT
AC-L1
AC-L2
AC-L3
PE
Reactor
DC+
DC-
U V W
CM
DC FM
PUMP
Flow Switch
Low Pressure Switch
High Pressure Switch
Water Leak Sensor (optional)
Outlet Water Temperature
Ambient Temperature
Suction Temperature
Low Pressure Sensor
High Pressure Sensor
Inlet Water Temperature
Exhaust Temperature
Anti-Freeze Temperature
Electronic Expansion Valve
4-Way Valve
Bottom Heater
Crankcase Heater
Display
IBH1
IBH2
TBH
1: Electric heater1
2:
3: Electric heater2
5 6: DHW tank heater
L1 H: Thermostat Signal H
SL1 SL2: Solar water heater
P_O N: Secondary Circulation Pump
10FF/10N N: DHW 3 way valve
30FF/30N N: Mixing 3 way valve
AHS1: AHS2: Auxiliary heat source
HT N: Ant-freeze heater
P_S N: Solar water pump
P_W N: Mixing water pump
DFR1 DFR2: Defrost signal
EBR1 EBR2: Error signal
A15A: Bottom Temp. of BT
A15B: Too Temp. of BT
A15C: DHW tank temp.
A15D: Outlet temp of whole system
A15E: Inlet temp. of FH
7 8: EVU
9 10: S 6
11 12: Customer remote control
A1 B1: Cascade
A2 B2: BWS
* For terminal 1-6, the maximum power input should be lower than 3kW, the other 220V terminals should be lower than 400W

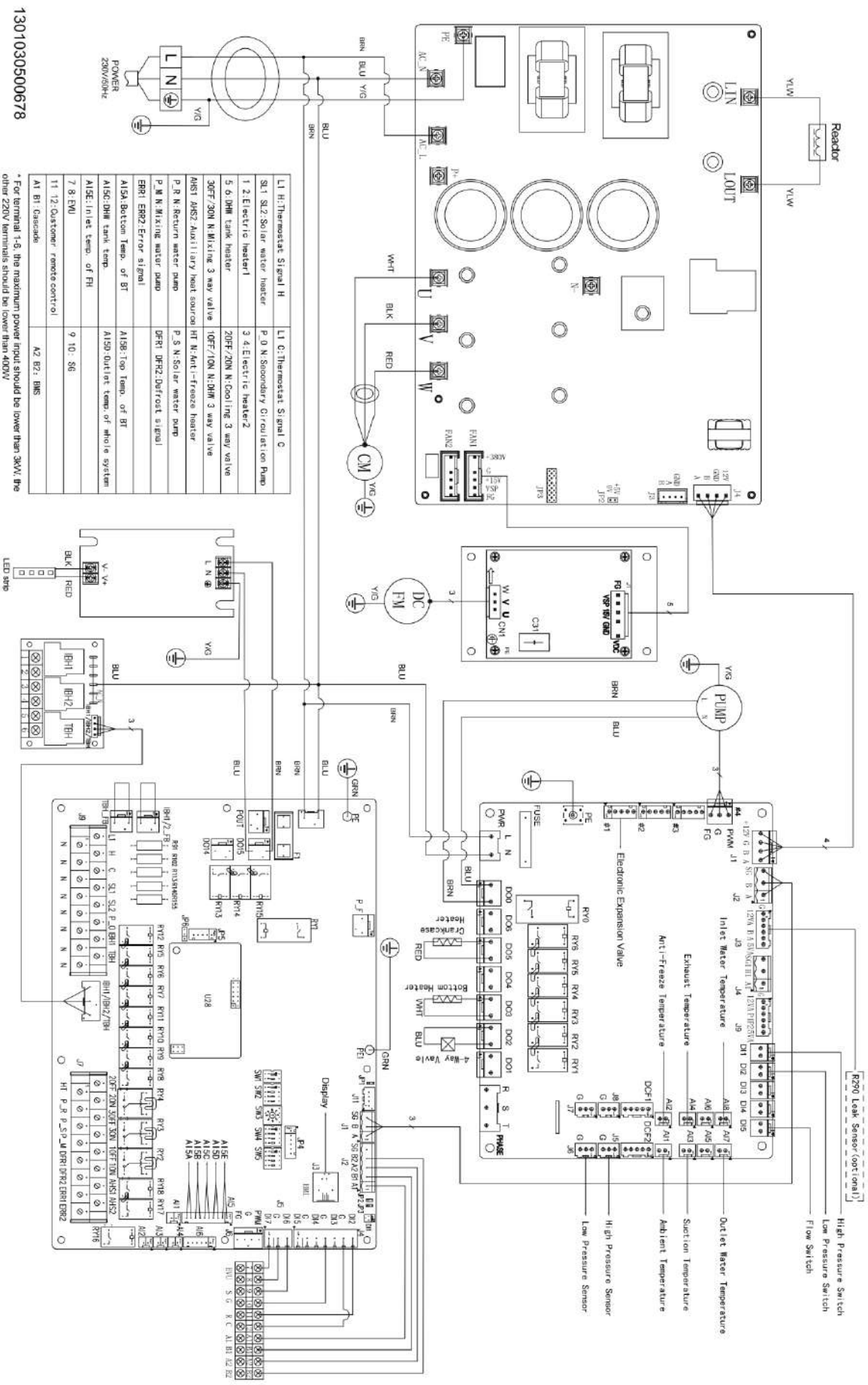
1301030500678
L1 H:Thermostat Signal H
L1 C:Thermostat Signal C
SL1 SL2:Solar water heater
P_D N:Secondary Circulation Pump
1 2:Electric heater1
3 4:Electric heater2
5 6:DHW tank heater
20FF/20N N:Cooling 3 way valve
30FF/30N N:Mixing 3 way valve
10FF/10N N:DHW 3 way valve
AHS1 AHS2:Auxiliary heat source
HT N:Anti-freeze heater
P_R N:Return water pump
P_S N:Solar water pump
P_M N:Mixing water pump
DFR1 DFR2:Defrost signal
ERR1 ERR2:Error signal
AI5A:Bottom Temp. of BT
AI5B:Top Temp. of BT
AI5C:DHW tank temp
AI5D:Outlet temp. of whole system
AI5E:Inlet temp. of FH
7 8:EVU
9 10: S6
11 12:Customer remote control
A1 B1: Cascade
A2 B2: BMS
* For terminal 1-6, the maximum power input should be lower than 3kW; the other 220V terminals should be lower than 400W
POWER 230V/50Hz
Reactor
LIN
LOUT
CM
DC FM
PUMP
4-Way Valve
Crankcase Heater
Bottom Heater
Electronic Expansion Valve
Inlet Water Temperature
Exhaust Temperature
Anti-Freeze Temperature
Outlet Water Temperature
Suction Temperature
Ambient Temperature
High Pressure Sensor
Low Pressure Sensor
High Pressure Switch
Low Pressure Switch
Flow Switch
R290 Leak Sensor(optional)
Display
LED strip

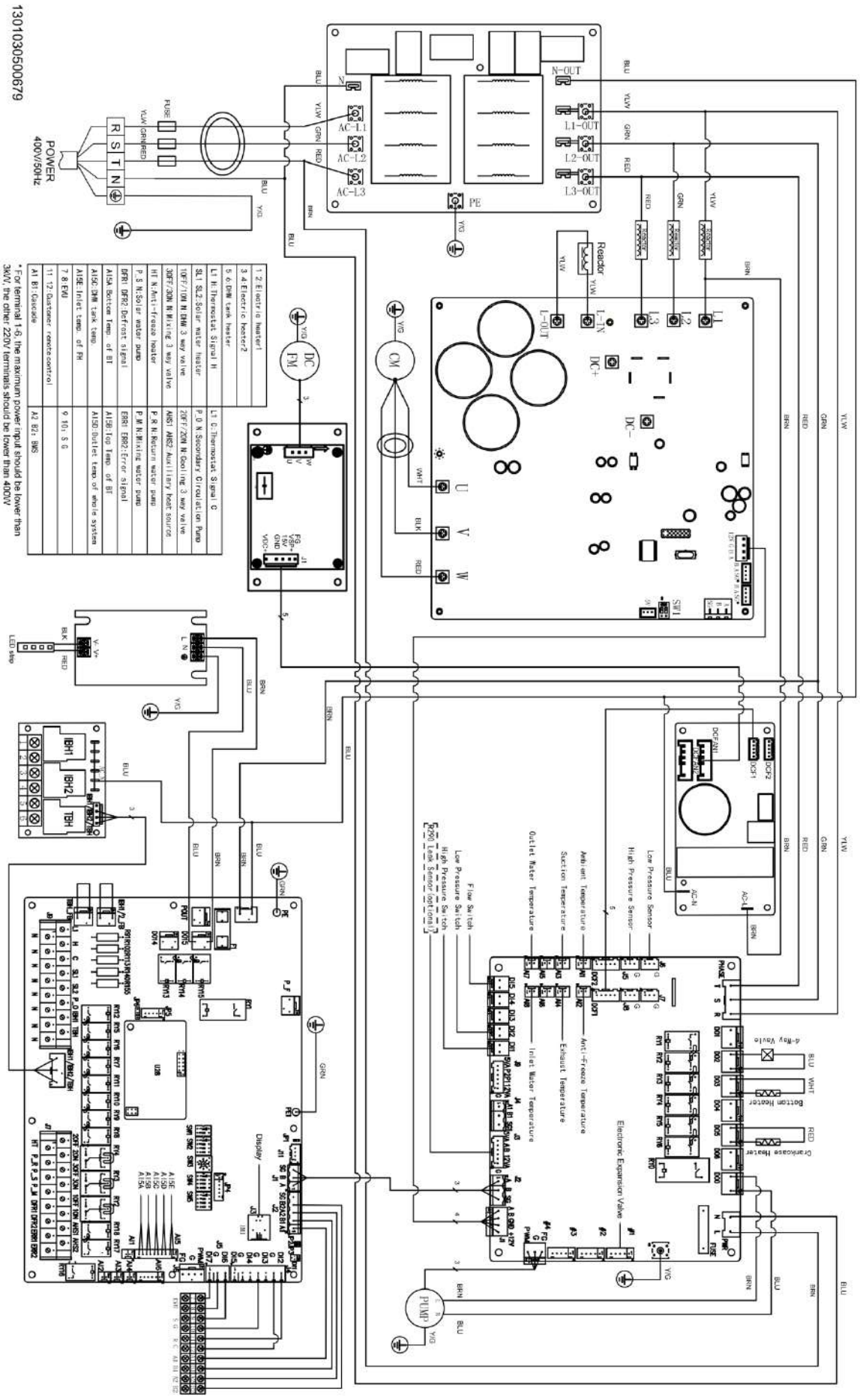
1301030500679
POWER
400V/50Hz
R S T N
FUSE
N-OUT
L1-OUT
L2-OUT
L3-OUT
AC-L1
AC-L2
AC-L3
PE
Reactor
DC+
DC-
U V W
CM
FM
IBH1
IBH2
TBH
Display
PUMP
Flow Switch
Low Pressure Switch
High Pressure Switch
Outlet Water Temperature
Ambient Temperature
Suction Temperature
High Pressure Sensor
Low Pressure Sensor
Anti-freeze Temperature
Exhaust Temperature
Inlet Water Temperature
Electronic Expansion Valve
4-Way Valve
Bottom Heater
Crankcase Heater
1: 2: Electric heater1
3: 4: Electric heater2
5: 6: DHW tank heater
L1: H: Thermostat Signal H
SL1: SL2: Solar water heater
10KF/10KN DHW 3 way valve
30KF/30KN Mixing 3 way valve
H1: Anti-freeze heater
P_S: N: Solar water pump
DFR1: DFR2: Defrost signal
AI5A: Bottom Temp. of BT
AI5C: DHW tank temp.
AI5E: Inlet temp. of FH
7: 8: FVU
11: 12: Customer remote control
A1: B1: Cascade
L1: O: Thermostat Signal C
P_O: N: Secondary Circulation Pump
20KF/20KN DHW 3 way valve
ANS1: ANS2: Auxiliary heat source
P_M: N: Return water pump
P_M: N: Mixing water pump
ER1: ER2: Error signal
AI5B: Top Temp. of BT
AI5D: Outlet temp of whole system
9: 10: S_G
A2: B2: DMS
* For terminal 1-6, the maximum power input should be lower than 3KW, the other 220V terminals should be lower than 400W

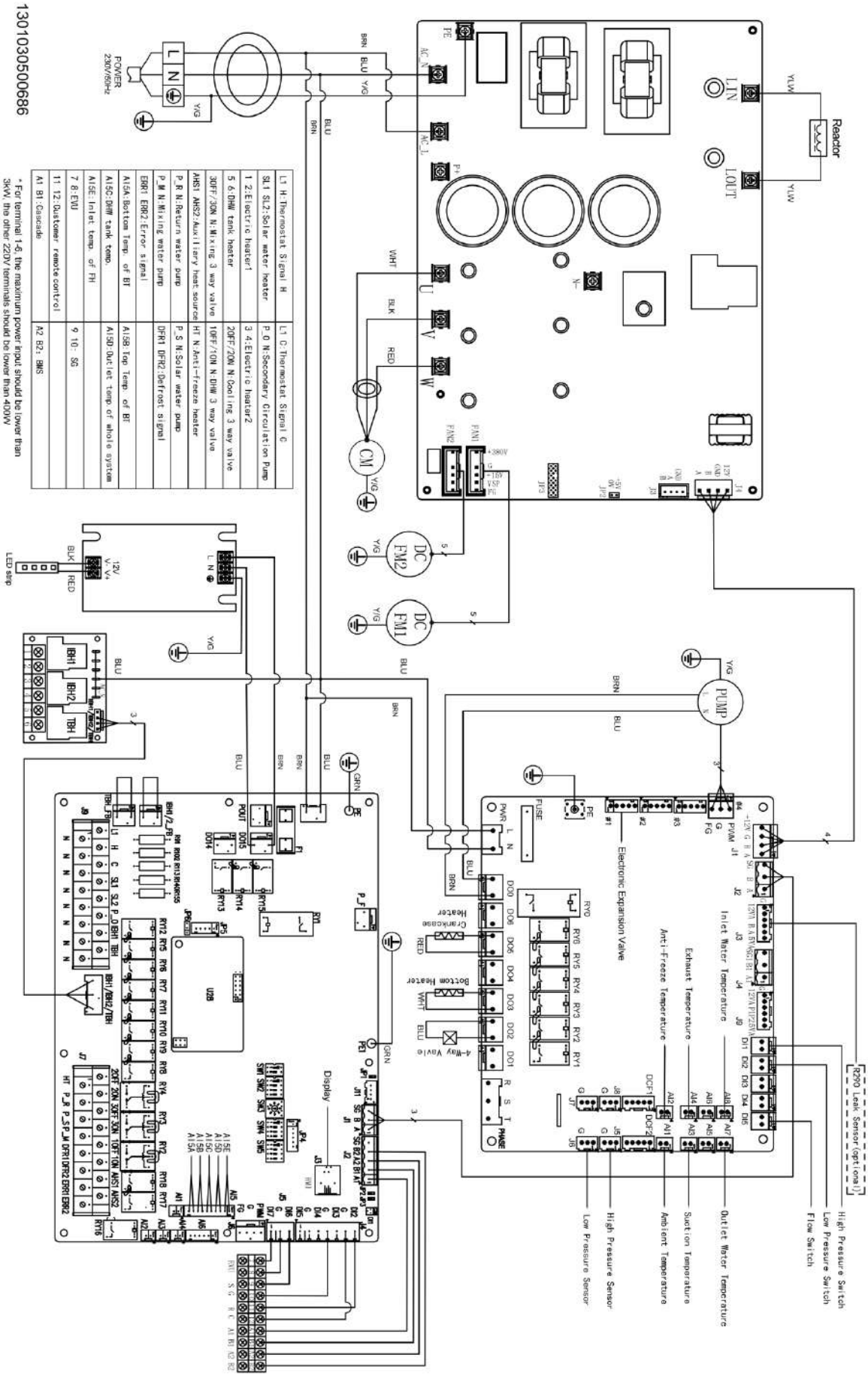
1301030500686
POWER 230V/50Hz
Reactor
Electronic Expansion Valve
Inlet Water Temperature
Exhaust Temperature
Anti-Freeze Temperature
Heater
Crankcase Heater
Bottom Heater
4-Way Valve
Display
PUMP
FM1
FM2
CM
R290 Leak Sensor(Optional)
High Pressure Switch
Low Pressure Switch
Flow Switch
Outlet Water Temperature
Suction Temperature
Ambient Temperature
High Pressure Sensor
Low Pressure Sensor
LED strip
L1 H:Thermostat Signal H
SL1 SL2:Solar water heater
1 2:Electric heater1
5 6:DHW tank heater
30FF/30N N:Mixing 3 way valve
AHS1 AHS2:Auxiliary heat source
P_R N:Return water pump
P_M N:Mixing water pump
ERR1 ERR2:Error signal
AI5A:Bottom Temp. of BT
AI5C:DHW tank temp.
AI5E:Inlet temp. of FH
7 8:EVU
9 10: SG
11 12:Customer remote control
A1 B1:Cascade
L1 C:Thermostat Signal C
P_O N:Secondary Circulation Pump
3 4:Electric heater2
20FF/20N N:Cooling 3 way valve
10FF/10N N:DHW 3 way valve
HT N:Anti-freeze heater
P_S N:Solar water pump
DFR1 DFR2:Defrost signal
AI5B:Top Temp. of BT
AI5D:Outlet temp of whole system
A2 B2: BMS
* For terminal 1-6, the maximum power input should be lower than 3kW, the other 220V terminals should be lower than 400W

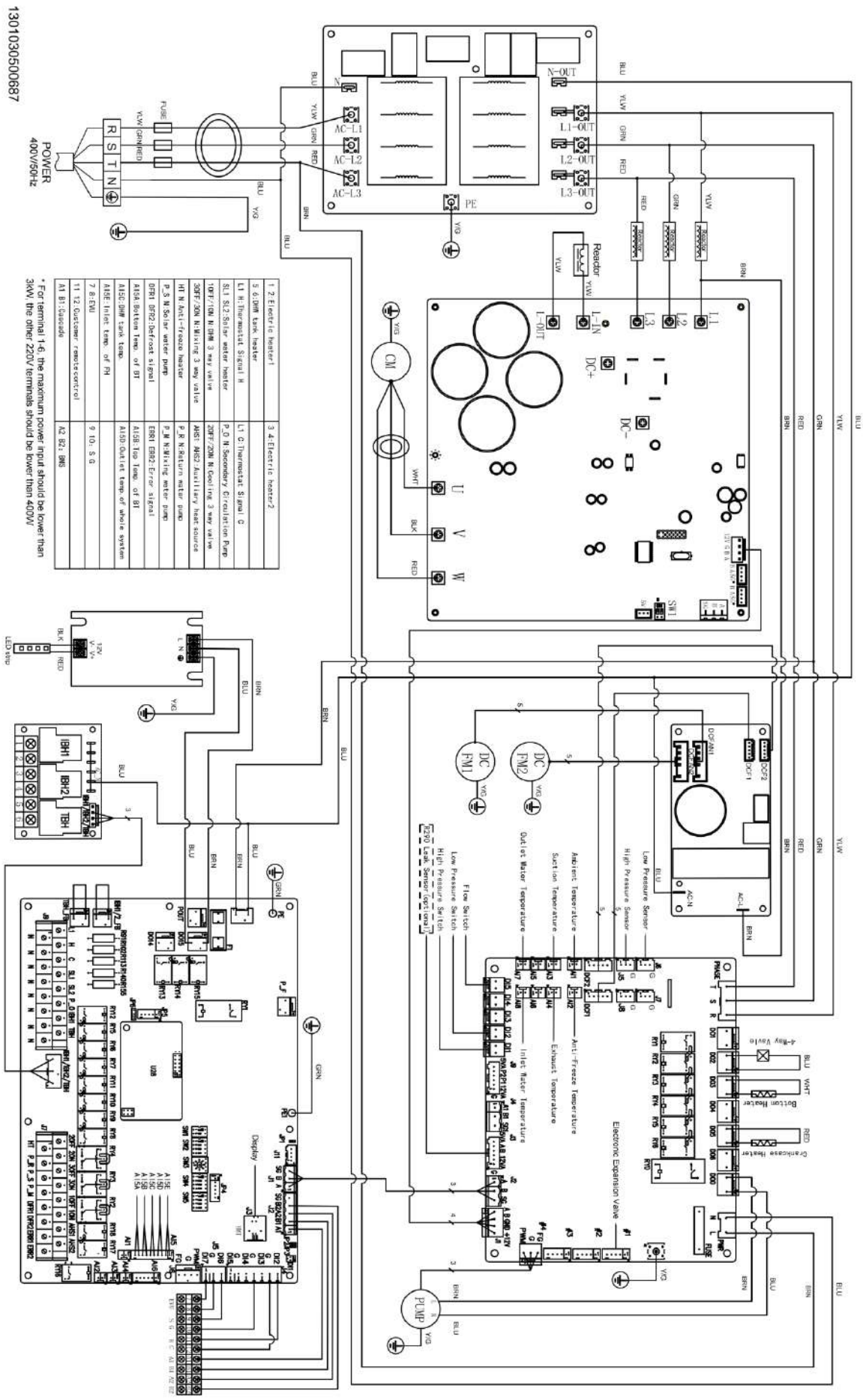
1301030500687
POWER
400V/50Hz
R S T N
N-OUT
AC-L1
AC-L2
AC-L3
PE
L1-OUT
L2-OUT
L3-OUT
Reactor
L-IN
L-OUT
DC+
DC-
CM
U V W
SW1
DC FM1
DC FM2
IBH1
IBH2
TBH
Display
PUMP
Flow Switch
High Pressure Switch
Low Pressure Switch
Ambient Temperature
Suction Temperature
Outlet Water Temperature
Inlet Water Temperature
Exhaust Temperature
Anti-Freeze Temperature
High Pressure Sensor
Low Pressure Sensor
Electronic Expansion Valve
4-Way Valve
Bottom Heater
Crankcase Heater
1: 2:Electric heater1 3:4:Electric heater2
5: 6:DHW tank heater L1 H:Thermostat Signal H L1 C:Thermostat Signal C
SL1 SL2:Solar water heater P_D N:Secondary Circulation Pump
3OFF:20N N:DHW 3-way valve 2OFF:20N N:Cooling 3-way valve
3OFF:3ON N:Mixing 3-way valve AHS1 AHS2:Auxiliary heat source
HT N:Anti-freeze heater P_R N:Return water pump
P_S N:Solar water pump P_M N:Mixing water pump
DFR1 DFR2:Defrost signal ERR1 ERR2:Error signal
A15A:Bottom Temp. of BT A15B:Top Temp. of BT
A15C:DHW tank temp. A15D:Outlet temp.of whole system
A15E:Inlet temp. of FH A15F:Exhaust temp.
7 8:ENV 9 10: S G
11 12:Customer remote control
A1 B1:Cascade A2 B2: BMS
* For terminal 1-6, the maximum power input should be lower than 3kW, the other 220V terminals should be lower than 400W.

14.2.2 Control board interface diagram

Main Board

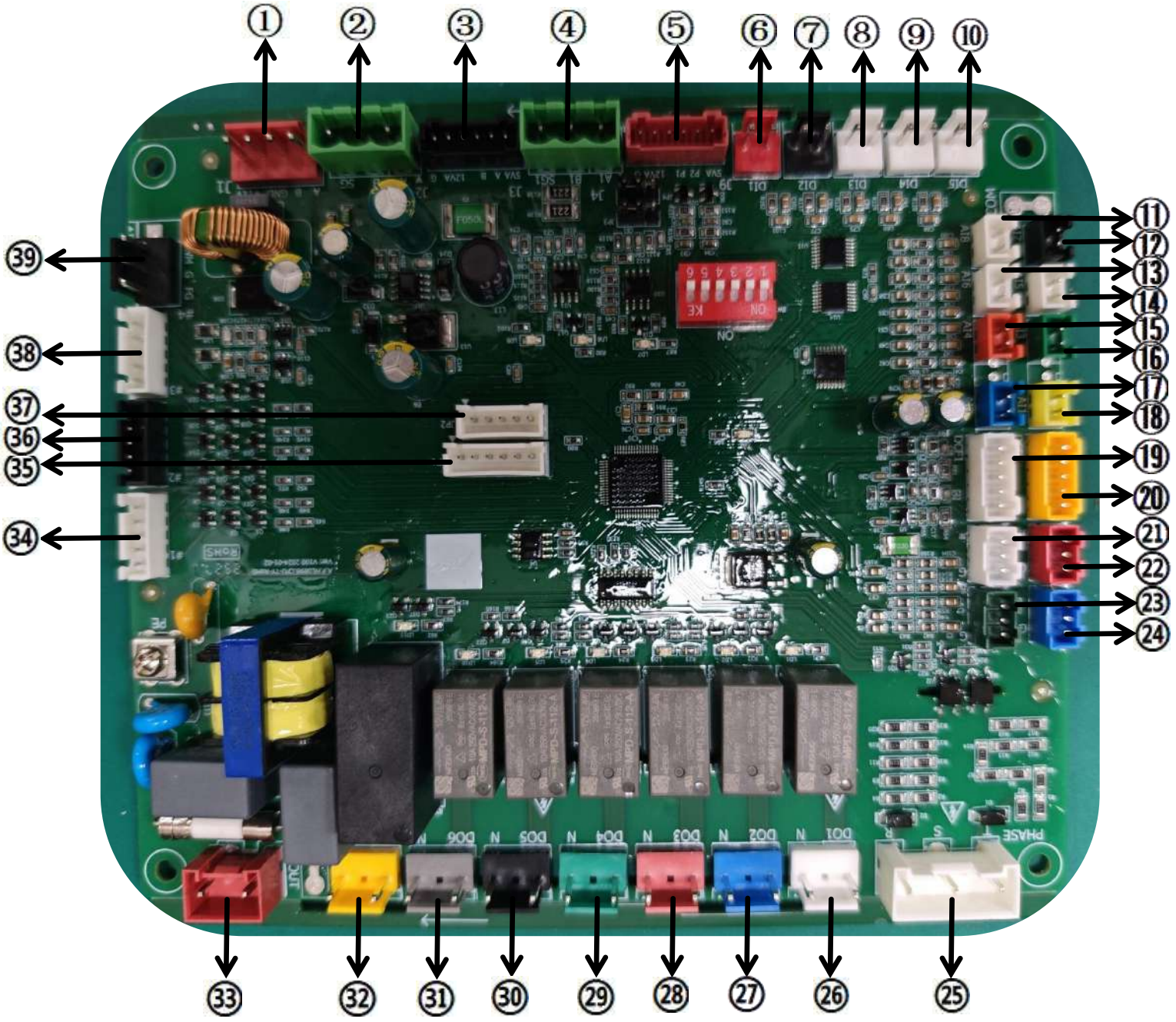

Label	Port code	Content	Rated voltage
①	J1	Communicate with inverter board, RS485	A B：0-5V DC +12V GND：12V DC
②	J2	Communicate with expansion board, RS485	A B：0-5V DC
③	J3	Reserved	A B：0-5V DC 5VA G：5V DC 12VA G：12V DC
④	J4	Reserved	A1 B1：0-5V DC
⑤	J9	Port for R290 refrigerant sensor	P1 P2：0-5V DC 5VA G：5V DC 12VA G：12V DC
⑥	DI1	Port for high-pressure switch	0-5V DC
⑦	DI2	Port for low-pressure switch	0-5V DC
⑧	DI3	Reserved	0-5V DC
⑨	DI4	Reserved	0-5V DC
⑩	DI5	Port for water flow switch	0-5V DC
⑪	AI8	Port for inlet water temperature sensor	0-5V DC
⑫	AI7	Port for outlet water temperature sensor	0-5V DC
⑬	AI6	Reserved	0-5V DC
⑭	AI5	Port for anti-freeze temperature sensor	0-5V DC
⑮	AI4	Port for exhaust temperature sensor	0-5V DC
⑯	AI3	Port for suction temperature sensor	0-5V DC
⑰	AI2	Port for coil temperature sensor	0-5V DC
⑱	AI1	Port for ambient temperature sensor	0-5V DC
⑲	DCF1	Reserved	0-5V DC
⑳	DCF2	Reserved	0-5V DC
㉑	J8	Reserved	0-5V DC
㉒	J5	Port for high-pressure sensor	0-5V DC
㉓	J7	Reserved	0-5V DC
㉔	J6	Port for low-pressure sensor	0-5V DC
㉕	PHASE	Reserved	380V AC
㉖	DO1	Reserved	220V AC
㉗	DO2	Port for four-way valve	220V AC
㉘	DO3	Port for Bottom heater	220V AC

㉙	DO4	Reserved	220V AC
㉚	DO5	Port for crankcase heater	220V AC
㉛	DO6	Reserved	220V AC
㉜	DO0	Port for main circulation pump	220V AC
㉝	PWR	Power supply port, 220V	220V AC
㉞	#1	Port for electronic expansion valve	0-12V DC
㉟	JP1	Port for the programming software	0-5V DC
㊱	#2	Reserved	0-12V DC
㊲	JP2	Reserved	0-5V DC
㊳	#3	Reserved	0-12V DC
㊴	#4	Port for PWM control of main circulation pump	0-5V DC

Expansion Board

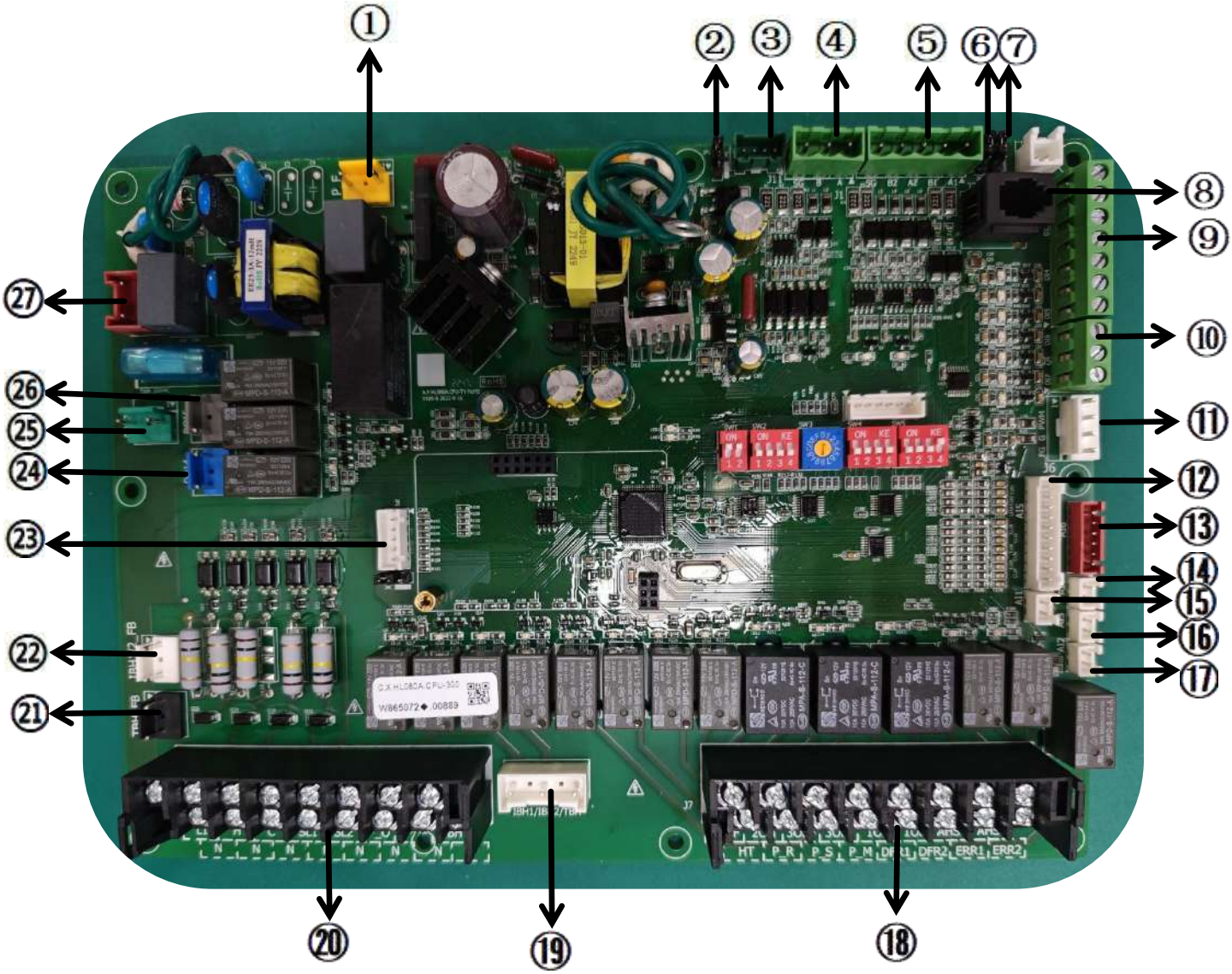

Note: For terminal 1-6, the maximum power input should be lower than 3kW, the other 220V terminals should be lower than 400W.

Label	Port code	Content	Rated voltage
①	P_F	Reserved	220V AC
②	JP1	Reserved	0-5V DC
③	J11	Reserved	0-5V DC
④	J1	Communicate with the main board, RS485	A B：0-5V DC
⑤	J2	RS485 A1_B1/RS485 A2_B2	A1 B1：0-5V DC A2 B2：0-5V DC
⑥	JP2	Reserved	0-5V DC
⑦	JP3	Reserved	0-5V DC
⑧	J3	Port for the display	pin1-2：12V DC pin3-4：0-5V DC
⑨	J4	Reserved	0-5V DC
⑩	J5	Reserved	0-5V DC
⑪	J6	Reserved	0-5V DC
⑫	AI5	AI5E: Port for floor heating inlet temp. sensor AI5D: Port for whole system outlet temp. sensor AI5C: Port for DHW tank temp. sensor AI5B: Port for buffer tank top temp. sensor AI5A: Port for buffer tank bottom temp. sensor	0-3.25V DC
⑬	AI6	Reserved	0-3.25V DC
⑭	AI4	Reserved	0-3.25V DC
⑮	AI1	Reserved	0-3.25V DC
⑯	AI3	Reserved	0-3.25V DC
⑰	AI2	Reserved	0-3.25V DC
⑱	J7	20FF/20N N:Cooling 3 way valve 30FF/30N N:Mixing 3 way valve 10FF/10N N:DHW 3 way valve AHS1 AHS2:Auxiliary heat source1/2 HT:Pan heater P_R:Return water pump P_S:Solar water pump P_M:Mixing water pump DFR1 DFR2:Defrost signal ERR1 ERR2:Error signal	220V AC
⑲	IBH1/IBH1/TBH	IBH1:Electric heat1	220V AC

		IBH2:Electric heat2 TBH:DHW tank heater	
⑳	J9	L1 H:Thermostat Signal H L1 C:Thermostat Signal C SL1 SL2:Solar water heater P_0 N:Secondary Circulation Pump	220V AC
㉑	TBH_FB	Port for the overload protector of water tank electric heater	220V AC
㉒	IBH1/2_FB	Port for the overload protector of electric heater 1/2	220V AC
㉓	JP5	Reserved	0-5V DC
㉔	DO14	Reserved	220V AC
㉕	POUT	Reserved	220V AC
㉖	DO15	Reserved	220V AC
㉗	PWR	Power supply port, 220V	220V AC

Inverter Board

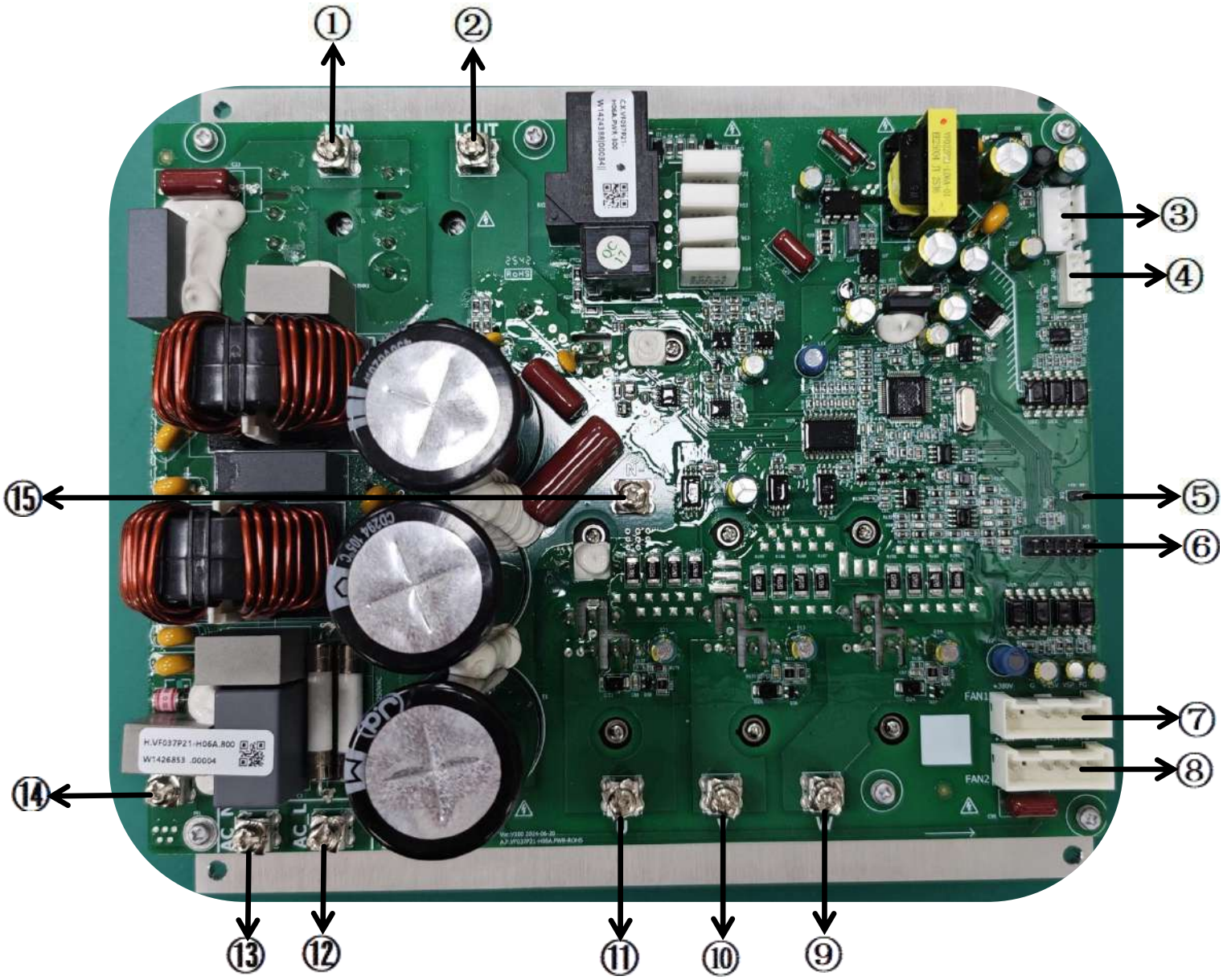

Label	Port code	Content	Rated voltage
①	LIN	Port for reactor input power	0-400V
②	LOUT	Port for reactor output power	0-400V
③	J4	Communicate with the mainboard, RS485	0-14V
④	J3	Reserved	0-14V
⑤	JP2	Reserved	0-5V
⑥	JP3	Reserved	0-5V
⑦	FAN1	Port for fan motor	0-400V
⑧	FAN2	Reserved	0-400V
⑨	W	Power output W of inverter PCB to compressor	0-220V
⑩	V	Power output V of inverter PCB to compressor	0-220V
⑪	U	Power output U of inverter PCB to compressor	0-220V
⑫	AC_L	Power input L of inverter PCB	0-220V
⑬	AC_N	Power input N of inverter PCB	0-220V
⑭	PE	Ground	/
⑮	N-	Port for the neutral wire	0-400V

14.2.3 Temperature sensors

Sensor Name	Resistance	Diameter	Encapsulation	Cable Length	Sheath	Connector
Inlet Water Temp Sensor	R25/10K	⌀ 6	Copper-sealed	1800mm	PVC Tube	Blue
Outlet Water Temp Sensor	R25/10K	⌀ 6	Copper-sealed	1800mm	PVC Tube	Brown
Inner Coil Temp Sensor	R25/10K	⌀ 6	Copper-sealed	1400mm	PVC Tube	Green
Suction Gas Temp Sensor	R25/10K	⌀ 6	Copper-sealed	1400mm	PVC Tube	Black
Discharge Gas Temp Sensor	R100/3.77K	⌀ 5	Copper-sealed	1800mm	Fiber Sleeve	Red
Ambient Temp Sensor	R25/10K	-	Drop-shaped Epoxy	1000mm	PVC Tube	Yellow

15 Maintenance and service

15.1 Safety precautions for maintenance

DANGER: RISK OF ELECTROCUTION
DANGER: RISK OF BURNING/SCALDING
1. The water in the tank may get extremely hot.
WARNING
1. If the internal wiring is damaged, it must be replaced by the manufacturer, its service agent, or other similarly qualified individuals.
2. Ensure the valve (if fitted) leading to the expansion vessel is opened; otherwise, overpressure may occur.
3. Please note that some parts of the electrical component box can get hot.
4. Do not spray or rinse the unit, as this may lead to electric shock or fire hazards.
5. Do not leave the unit unattended with the service panel removed.
CAUTION
1. Water coming out of the valve can be extremely hot.
2. Users shall not alter the internal structure or wiring of the equipment.
NOTICE
1. Maintenance MUST be performed by an authorized installer or service agent.
2. We recommend performing maintenance at least once a year. However, applicable legislation may require shorter maintenance intervals.
3. Before performing any maintenance or service work, touch a metal part of the unit to eliminate static electricity and protect the PCB.
4. Handle the filter with care. To prevent damage to the filter mesh, do not use excessive force when reinserting it.
5. Handle the water filters with care. Do not use excessive force when reinserting them to avoid damaging the water filter mesh.
6. When checking the magnetic filter/dirt separator for tightness, hold it firmly to avoid applying stress to the water piping.
7. Do not isolate the magnetic filter/dirt separator by closing the shut-off valves. Sufficient pressure is required to properly empty the dirt separator.
8. To prevent dirt from remaining in the dirt separator, ALWAYS remove the magnetic sleeve.
9. ALWAYS first unscrew the drain cap, connect a drain hose to the bottom of the water filter, then open the drain valve.
10. When using agents for descaling or chemical disinfection, ensure the water quality still complies with EU Directive 2020/2184.
11. Although the water circuit is drained, some water may spill when removing the magnetic filter/dirt separator from the filter housing. ALWAYS clean up any spilled water.

12. To protect the piping connected to the magnetic filter/dirt separator from damage, it is recommended to perform this procedure with the magnetic filter/dirt separator removed from the unit.
13. Opening the magnetic filter/dirt separator is only required in case of severe issues. Preferably, this action should never be performed during the entire service life of the magnetic filter/dirt separator.
INFORMATION
1. For annual maintenance, it is not necessary to remove the water filter from the unit to clean it. However, if there is an issue with the water filter, you may need to remove it for a thorough cleaning.
2. It is recommended that this maintenance be performed more than once a year.
3. Install the strainer correctly in the housing of the magnetic filter/dirt separator using the protrusions.

15.2 Tools used for maintenance

1. Flaring tool (clutch type)

The flaring tool features a larger clamping bar hole to position the pipe end at 0-0.5 mm, and incorporates a stronger internal spring to ensure reliable flaring torque.



2. Torque wrench

To improve compression strength, the wrench diameter varies based on the size of the flare nut. It is typically used for installing and removing globe valve caps.

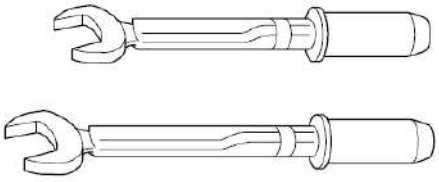

3. Phillips screwdriver

It is typically used for installing and removing screws.



4. Hexagonal wrench

It is typically used for opening and closing globe valve gates.



Specification: 3/8" hexagonal

5. Pipe cutter

It is typically used for cutting copper pipes.



6. Multimeter

It is typically used to test electrical circuits when circuit.



7. Manifold pressure gauge

Each port of the manifold features a distinct shape to prevent the use of incorrect refrigerants.

* However, the port shapes for R410A and R32 are identical, so caution must be exercised to avoid using the wrong refrigerant.

	R32 (Compatible with R410A)	R290	R454B
High-pressure gauge (red)	-0.1 ~ 5.3 MPa -76 cmHg ~ 53 kgf / cm2	-76 cmHg ~ 35 kgf / cm2	-0.1 ~ 5.3 MPa -76 cmHg ~ 53 kgf / cm2
Low-pressure gauge (blue)	-0.1 ~ 3.8 MPa -76 cmHg ~ 38 kgf / cm2	-76 cmHg ~ 17 kgf / cm2	-0.1 ~ 3.8 MPa -76 cmHg ~ 38 kgf / cm2

Differences in manifold port sizes

	R32 (Compatible with R410A)	R290	R454B
Port size	1/2 UNF20	7/16 UNF20	1/2 UNF20

8. Charging hose

The charging hose has enhanced pressure resistance.

Meanwhile, its material has been upgraded to be HFC-resistant, and the size of each manifold adapter has been adjusted to align with the port size of the manifold gauge itself.

Additionally, some hoses are equipped with a check valve near the sampler to prevent backflow of gas pressure. (The use of hoses with valves is recommended.)

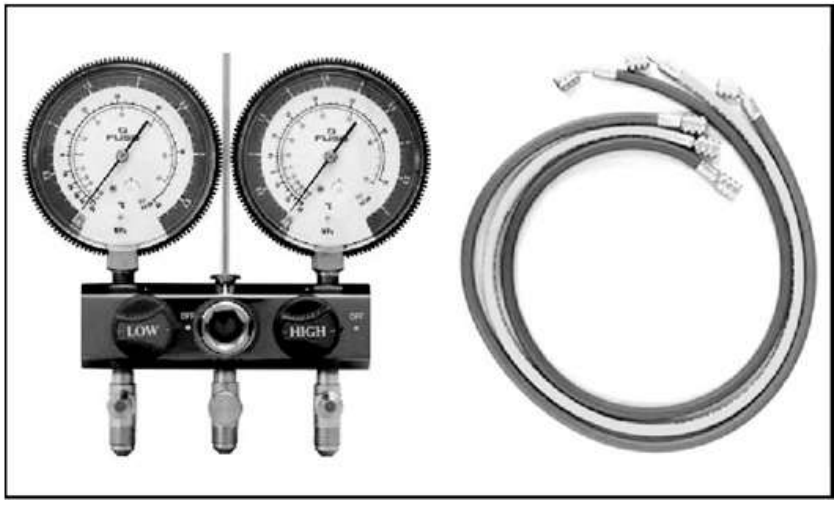

Differences in charging hoses

		R32 (Compatible with R410A)	R290	R454B
Pressure resistance	Normal working pressure	5.1 MPa (52 kgf / cm2)	3.4 MPa (35 kgf / cm2)	5.1 MPa (52 kgf / cm2)
	Burst pressure	27.4 MPa (280 kgf / cm2)	17.2 MPa (175 kgf / cm2)	27.4 MPa (280 kgf / cm2)
Material		HNBR rubber with nylon inner coating	NBR rubber	HNBR rubber with nylon inner coating

9. Vacuum pump and vacuum pump adapter

When using a vacuum pump, a solenoid valve must be installed to prevent vacuum pump oil from flowing back into the charging hose. Additionally, a vacuum pump with an anti-oil backflow function (or fitted with a vacuum pump adapter) should be used.

If vacuum pump oil (mineral oil-based) mixes with R410A (or R32), it could damage the equipment.

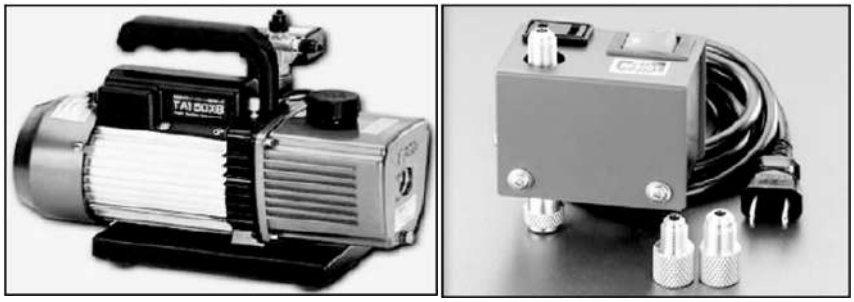

10. Electrical leak detector for HFC refrigerant

For more accurate detection, we recommend using a detector specifically configured and calibrated for R290 detection.



11. Digital scale for refrigerant charging

R32 and R410A are characterized by high pressure and rapid evaporation rates. Therefore, if refrigerant is recovered using the cylinder charging method (instead of liquefying it into the cylinder), the refrigerant will evaporate in the weighing glass, making it difficult to read the weight. (R22 charging cylinders differ in pressure resistance, scale, and connection port size, so they are not applicable.)

Furthermore, the digital scale for refrigerant charging is reinforced, with four pillars at the corners supporting the weight of the refrigerant cylinder. The charging hose is equipped with two separate connection ports: one for R22 (7/16 UNF20) and another for R32/R410A (1/2 UNF20), enabling compatibility with existing refrigerants.



12. Refrigerant cylinder

R290 is a single-component refrigerant, so both its liquid and gas forms can be charged, and additional charging is feasible.

The color of the cylinder varies by manufacturer. When in use, please carefully check the label on the refrigerant cylinder, which should include the refrigerant's chemical name (propane), R290 identification, and safety warnings for use and storage.

13. Connection port for refrigerant cylinder and filler

A charging port matching the size of the charging hose's connection port (1/2 UNF20) is required. Additionally, the packaging must be made of HFC-resistant materials.



For other installation work, common tools can be used, such as a metal saw, electric drill, long-nose pliers, hole core drill, flax tape, level, thermometer, clamp, electric knife, pliers, reamer or scraper, spring bender, adjustable wrench, fixed wrench, feeler gauge, hexagonal wrench (4 mm), tester, and megohmmeter.

15.3 Yearly maintenance

15.3.1 Overview: Yearly maintenance outdoor unit

Check the following at least once a year:

Heat exchanger

The heat exchanger of the outdoor unit may become clogged with dust, dirt, leaves, and other debris. It is recommended to clean the heat exchanger annually. A clogged heat exchanger can cause excessively low or high pressure, leading to reduced performance.

Water filter

Close the valve, then clean and rinse the water filter.

15.3.2 Maintenance checklist

By user

Items	Recommended frequency
Clean the surrounding of the outdoor unit.	Once a month.

By installer

Items	Recommended frequency
General	
Check if all the parts are in the proper position.	Once a year.
Water loop	
Check if the water pressure is sufficient.	Once a year.
Clean the strainer in water system.	Once a year.
Check if the flow switch works in good condition.	Once a year.
Check if the water pressure relief valve (in water system) works in good condition.	Once a year.
Check if the water pressure relief valve (in DHW water loop) works in good condition.	Once a year.
Check if the insulation of backup heater is in good condition.	Once a year.

Check if there is water leakage in the water loop. Take care if anti-refrigerant is applied.	Once a year.
Check if the booster heater of DHW water tank is clean and in good condition.	Once a year.
Wiring and electrical parts	
Check if the temperature sensor works in good condition.	Once a year.
Check if the wiring and cables of the installation is in good condition.	Once a year.
Check if the contactors and circuit breakers works in good condition.	Once a year.
Refrigerant loop	
Check if there is refrigerant leakage in the refrigerant loop.	Once a year.

15.4 Disassembly of structural components

15.4.1 Safety Precautions for maintenance

 **CAUTION**
1. The diagonal-patterned front frame is rather sharp. During disassembly, please exercise caution to avoid direct contact with its sharp edges.
2. Care should be taken with the position of the sheet metal parts to prevent them from hitting people.
3. The unit is in a stationary state with both power and water supply cut off.

15.4.2 Removing the top cover

① Loosen the three screws at the rear side of the top cover.

② Lift the top cover upwards from the unit.

③ Remove the top cover upwards.

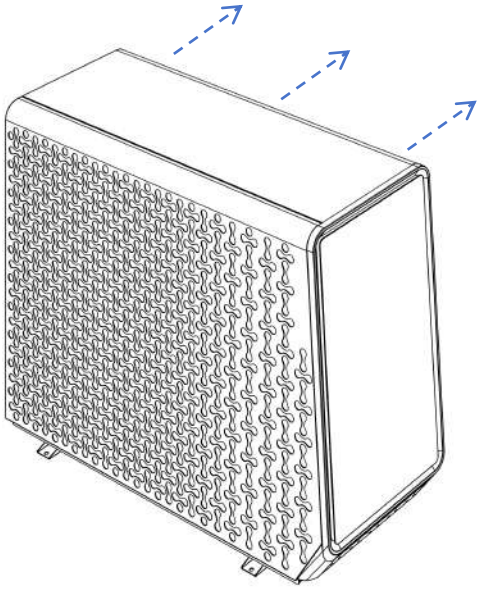

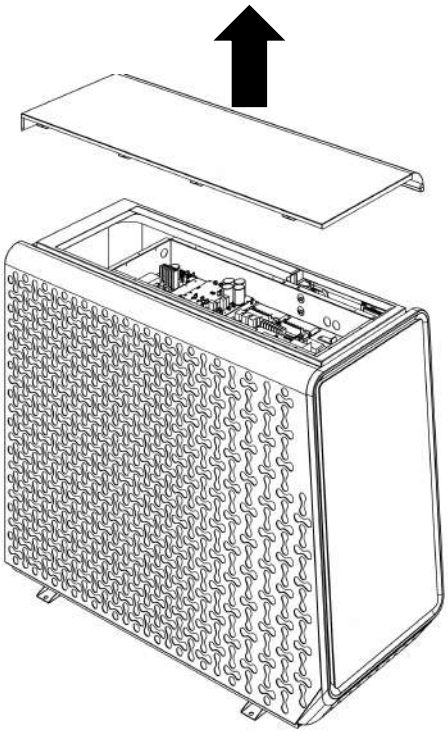

15.4.3 Removing the service panel

① Loosen these five screws.

② Push the side panel downwards, then pull it out horizontally.

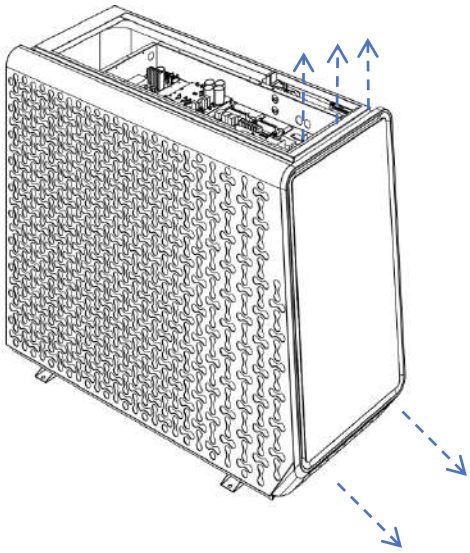

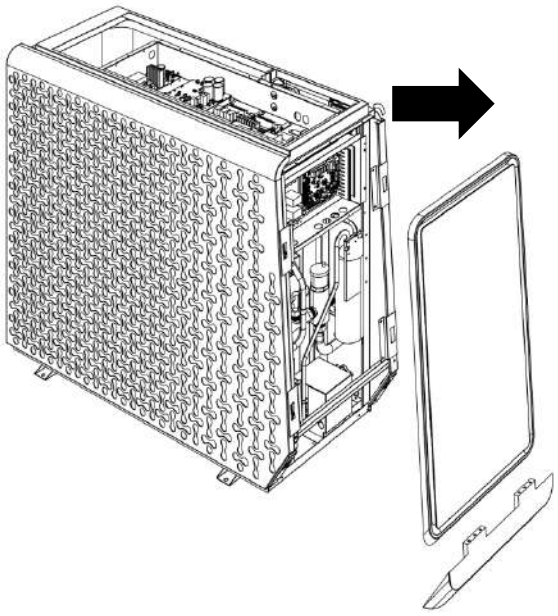

15.4.4 Removing the front frame

Note: Before removing the front frame, please ensure that your top cover and service panel have been removed.

① Loosen these four screws between the front frame and the top beam.

② Loosen these four screws between the front frame and bottom panel.

③ After removing all the above screws, push the front frame forward (be careful not to touch the sharp areas of the front frame with your hands)

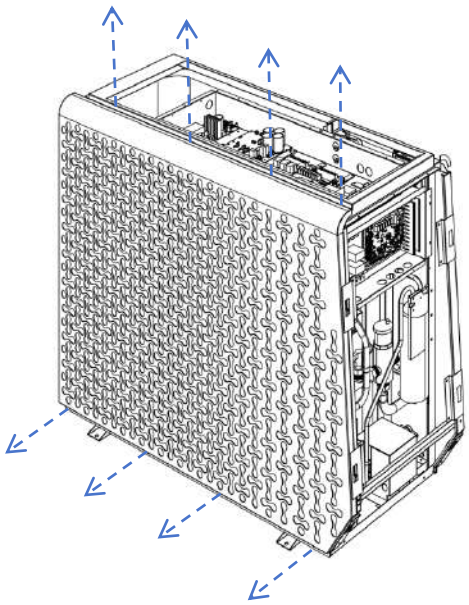

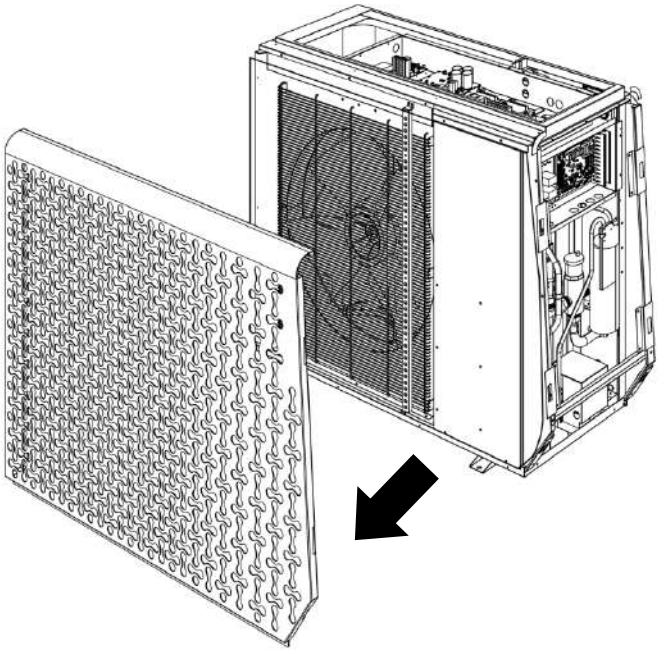

15.4.5 Removing the fan grille

① Loosen these six screws.

② Pull the air guide ring outwards.

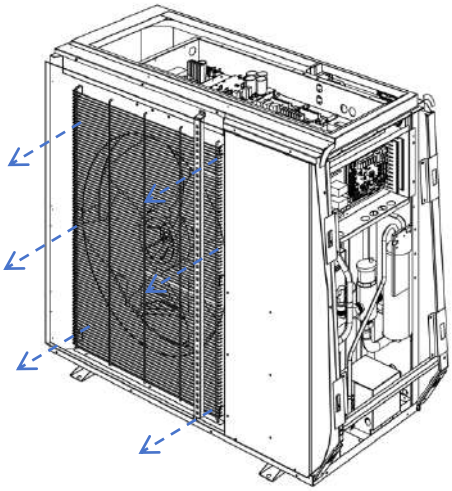

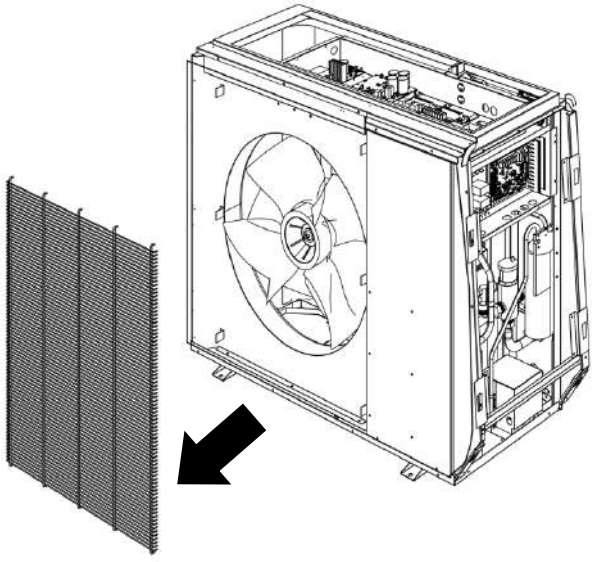

15.4.6 Removing the support plate

① Loosen these thirteen screws.

② Pull it out horizontally

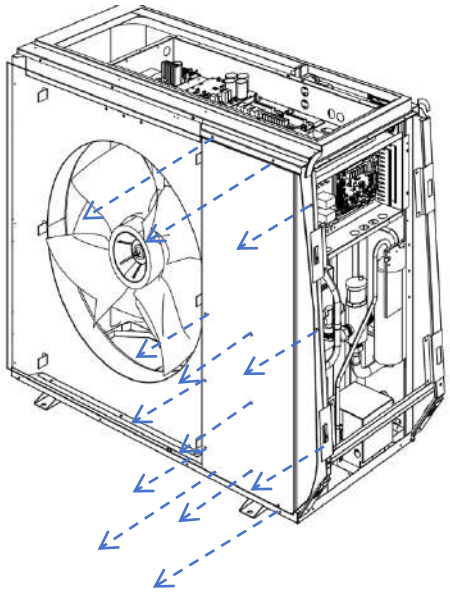

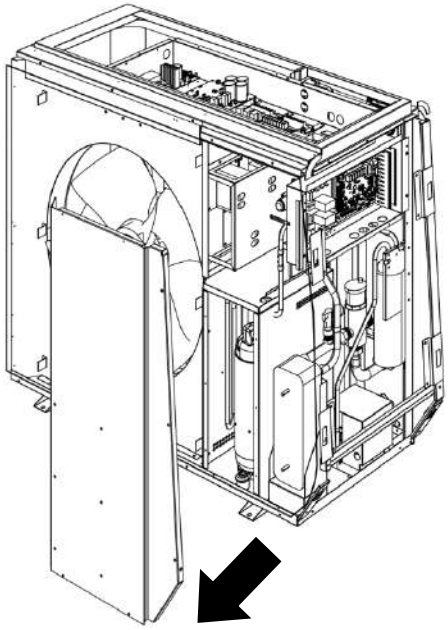

15.4.7 Removing the water connection panel

Note: Before removing the water connection panel, ensure that the service panel, rear protective mesh (if you have it), and top cover have been removed.

① Loosen these eight screws.

② Remove the water connection panel towards the rear direction.

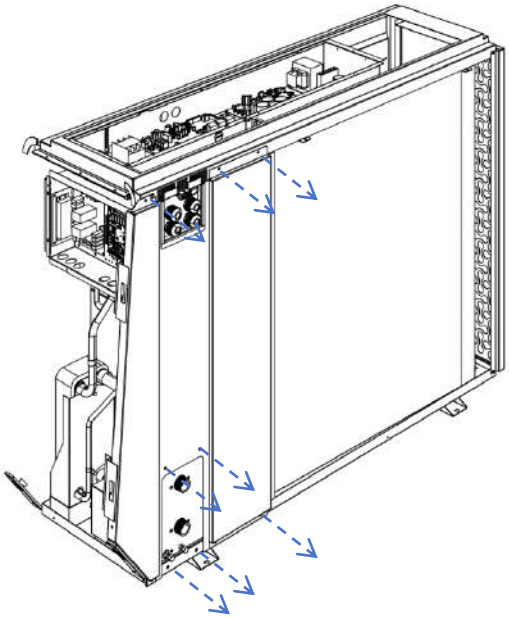

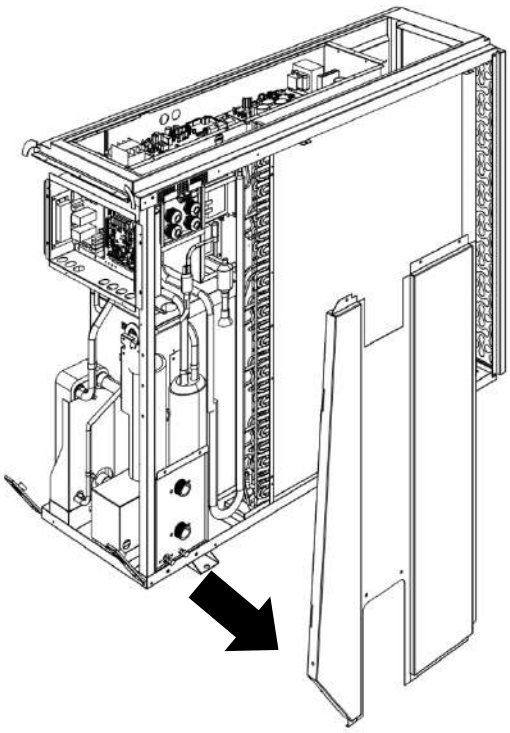

15.5 Replacement of electrical components

15.5.1 Replacing the main board

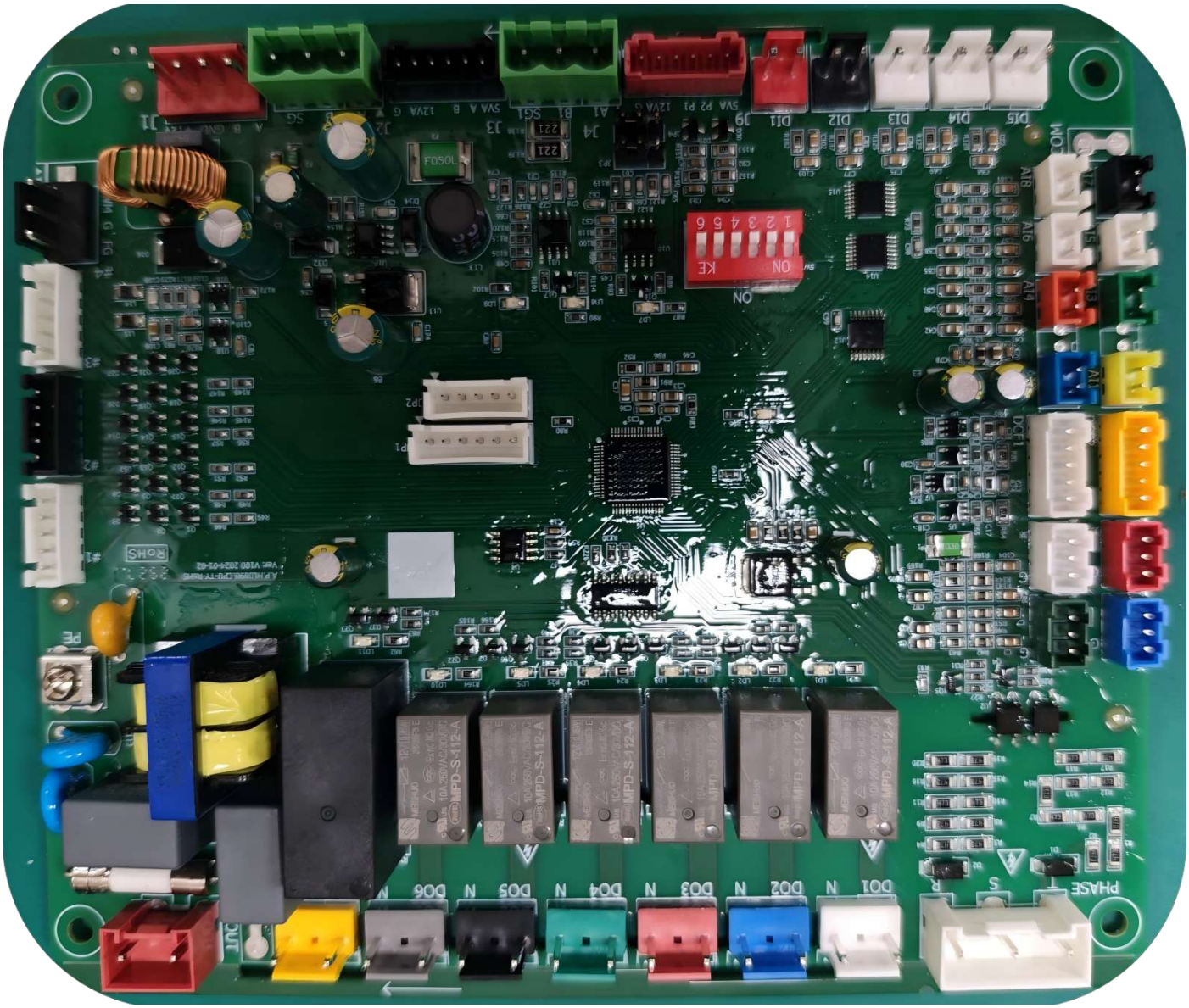

If the unit's load output is abnormal and it is determined that the main board needs to be replaced, follow these steps:

1. Ensure the unit is in a stopped state and disconnected from the power supply.
2. The service panel and top cover need to be removed.
3. Locate the position of the main board, which can be determined by referring to the unit’s exploded view in the appendix.
4. Remove the wire harnesses connected to the main board.
5. Use a Phillips screwdriver to loosen the screws fixing the main board.
6. Pull upwards forcefully to remove the damaged main board.
7. Install the replacement main board in the position of the electrical box, referring to the circuit diagram to reconnect the wire harnesses to their original positions.
8. Use the screwdriver to secure the main board.
9. Power on and verify the unit’s main control program.
10. After confirming that the unit’s main control parameters are correct, attempt to start the unit.
11. Debug various parameters of the unit, and only deliver to the customer after ensuring stable operation.

15.5.2 Replacing the expansion board

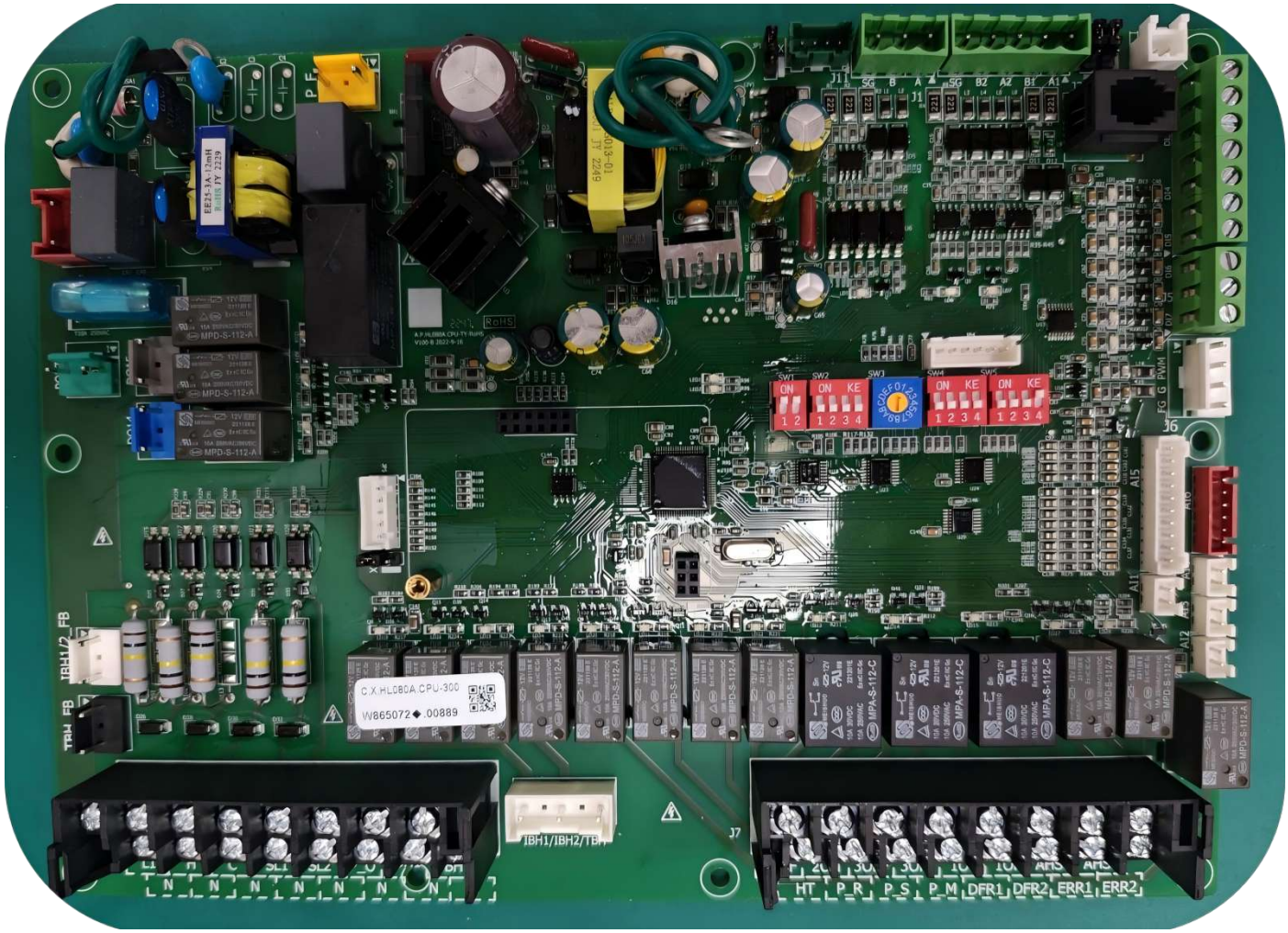

If the unit's load output is abnormal and it is determined that the expansion board needs to be replaced, follow these steps:

1. Ensure the unit is in a stopped state and disconnected from the power supply.
2. The service panel and top cover need to be removed.
3. Locate the position of the expansion board, which can be determined by referring to the unit’s exploded view in the appendix.
4. Remove the wire harnesses connected to the expansion board.
5. Use a Phillips screwdriver to loosen the screws fixing the expansion board.
6. Pull upwards forcefully to remove the damaged expansion board.
7. Install the replacement expansion board in the position of the electrical box, referring to the circuit diagram to reconnect the wire harnesses to their original positions.
8. Use the screwdriver to secure the expansion board.
9. Power on and verify the unit’s main control program.
10. After confirming that the unit’s main control parameters are correct, attempt to start the unit.
11. Debug various parameters of the unit, and only deliver to the customer after ensuring stable operation.

15.5.3 Replacing the drive board

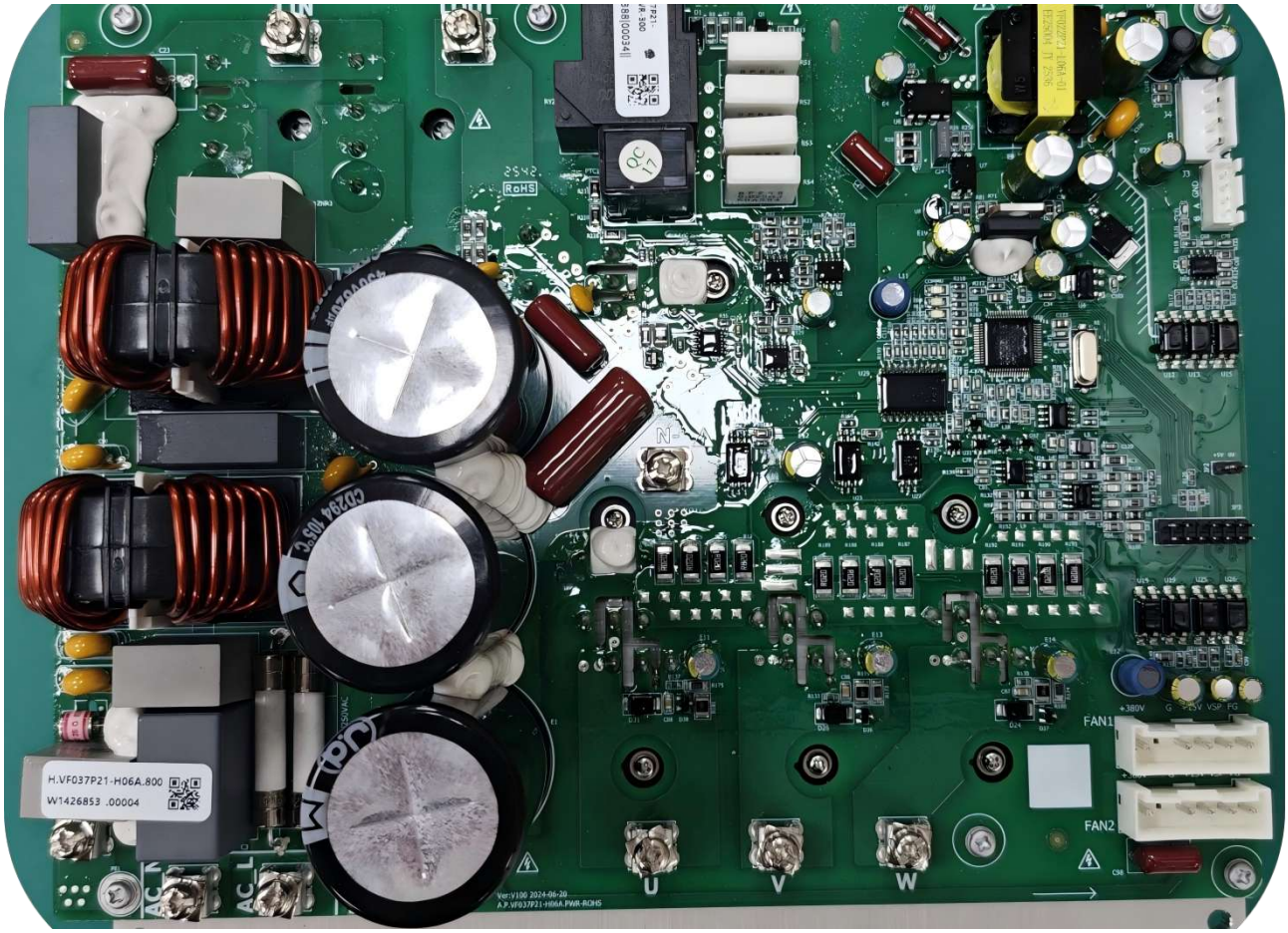

If the unit's load output is abnormal and it is determined that the expansion board needs to be replaced, follow these steps:

1. Ensure the unit is stopped and disconnected from the power supply.
2. The service panel and top cover need to be removed.
3. Locate the drive board, which can be identified by referring to the unit's exploded view in the appendix.
4. Disconnect the wire harnesses connected to the drive board.
5. Use a Phillips screwdriver to loosen the screws securing the drive board.
6. Pull upward firmly to remove the damaged drive board.
7. Install the replacement drive board in the electrical box position, and refer to the circuit diagram to reconnect the wire harnesses to their original locations.
8. Use the screwdriver to fasten the drive board.
9. Check whether the compressor parameters are normal and if the unit can start up properly.
10. Debug all parameters of the unit, and only hand it over to the customer after confirming stable operation

15.6 Service information

WARNING
1. These instructions are intended solely for qualified contractors and authorized installers.
2. Work on refrigerant circuits containing flammable refrigerants in safety group A2L may only be performed by authorized heating contractors. These contractors must have received training in accordance with EN 378 Part 4 or IEC 60335-2-40, Section HH, and hold a certificate of competence issued by an industry-accredited body.
3. Brazing/soldering work on the refrigerant circuit may only be carried out by contractors certified in accordance with ISO 13585 and AD 2000, Datasheet HP 100R, and only by those qualified and certified for the specific processes to be performed. The work must fall within the scope of the specified applications and be conducted in accordance with prescribed procedures. Brazing/soldering work on accumulator connections requires personnel and process certification by a notified body in compliance with the Pressure Equipment Directive (2014/68/EU).
4. Work on electrical equipment may only be performed by a qualified electrician.
5. Prior to initial commissioning, all safety-related points must be inspected by the relevant certified heating contractors. The system must be commissioned by the system installer or a qualified person authorized by the installer.

15.6.1 Label for refrigerant presence

Equipment should be fitted with a label indicating that it has been decommissioned and emptied of refrigerant. The label must include the date and a signature. Additionally, ensure that appropriate labels are affixed to the equipment to state that it contains flammable refrigerant.

15.6.2 Leak detection methods

The following leak detection methods are considered acceptable for systems containing flammable refrigerants. An electronic leak detector should be used to detect flammable refrigerants; however, its sensitivity may be insufficient, or the detector may require recalibration. (Detection equipment should be calibrated in a refrigerant-free area.) Ensure that the detector is not a potential source of ignition and is suitable for the specific refrigerant.

Leak detection equipment should be set to a percentage of the refrigerant's Lower Flammable Limit (LFL) and calibrated to be suitable for the refrigerant in use. The appropriate gas percentage (maximum 25%) must be confirmed.

Leak detection fluids are suitable for use with most refrigerants, but chlorine-containing detergents should not be used, as chlorine may react with the refrigerant and corrode copper pipes.

If a leak is suspected, all naked flames must be removed or extinguished. If a refrigerant leak is found and brazing is required, all refrigerant should be recovered from the system or isolated (using shut-off valves) in a part of the system remote from the leak. Oxygen-free nitrogen (OFN) should then be purged through the system both before and during the brazing process.

15.6.3 Check of refrigeration equipment

When electrical components need to be replaced, they must be suitable for their intended purpose and meet the correct specifications. Always adhere to the manufacturer's maintenance and service guidelines. If in doubt, consult the manufacturer's technical department for assistance.

For installations using flammable refrigerants, the following checks should be performed:

- The quantity of refrigerant to be charged depends on the size of the room where the refrigerant-containing parts are installed.

- Ventilation equipment and outlets should function properly and not be obstructed.
- If an indirect refrigeration circuit is used, the secondary circuits should be checked for any presence of refrigerant; markings on the equipment must be visible and legible.
- Illegible markings and signs should be corrected.
- Refrigeration pipes or components should be installed in positions where they are unlikely to be exposed to substances that may corrode refrigerant-containing components, unless the components are made of materials inherently resistant to corrosion or are appropriately protected against corrosion.

15.6.4 Check of electrical devices

Repair and maintenance of electrical components should include initial safety checks and component inspection procedures. If a fault exists that could compromise safety, the electrical supply to the circuit must not be connected until the fault is satisfactorily resolved. If the fault cannot be corrected immediately but continued operation is necessary, an appropriate temporary solution should be implemented. This must be reported to the equipment owner to ensure all parties are informed.
Initial safety checks should include the following:
- Capacitors should be safely discharged to avoid the risk of sparking.
- During system charging, recovery, or purging, no live electrical components or wiring may be exposed.
- Earth bonding must be continuous.

15.6.5 Repair of sealed components

When repairing sealed components, all electrical supplies must be disconnected from the equipment being worked on before any sealed covers are removed. If it is absolutely necessary to keep an electrical supply connected to the equipment during servicing, a continuously operating leak detection device should be placed at the most critical point to alert of potential hazards.
Special attention should be paid to the following to ensure that working on electrical components does not alter the casing in a way that compromises its protective function. This includes checking for damaged cables, an excessive number of connections, terminals not constructed according to original specifications, damaged seals, and incorrectly fitted glands:
- Ensure all apparatuses are securely mounted.
- Ensure seals or sealing materials have not degraded to the point where they can no longer prevent the entry of flammable atmospheres. Replacement parts must comply with the manufacturer’s specifications.
- The use of silicon sealant may reduce the effectiveness of some leak detection equipment. Intrinsically safe components do not need to be isolated before work is performed on them.

15.6.6 Repair of intrinsically safe components

Do not apply any permanent inductive or capacitive loads to the circuit without first ensuring that such loads will not exceed the permissible voltage or current for the equipment in use.
Intrinsically safe components are the only type that can be worked on when they are live in a flammable atmosphere.
Test apparatus must be provided with the correct rating.
Replace components solely with parts specified by the manufacturer. Using other parts may cause leaked refrigerant in the atmosphere to ignite.

15.6.7 Transportation and marking

Transport the equipment containing flammable refrigerants in accordance with the transport regulations. Mark the equipment with signs in compliance with local regulations.

15.7 Repair of refrigerant cycle/brazing points

WARNING
1. This operation must be carried out by professional welders.
2. This should be operated by professionals.
3. Welding should be conducted in a safe area.

15.7.1 Preparation for refrigerant cycle/brazing repair

Brazing is a technique necessary for repairing refrigerant cycle systems, requiring advanced skills and experience. This brazing process may only be performed by workers who have completed the "gas welding skills training" as specified in the *Occupational Safety and Health Act* and passed the refrigerant operation training program.

Disassembling and reconnecting (assembling) the refrigerant system requires a workspace with adequate ventilation and fire prevention measures (including fire buckets and fire extinguishers). In addition, workers must wear goggles, gloves, safety shoes, and long-sleeved shirts, remain vigilant about work safety, and take care to prevent secondary defects (to ensure product quality).

For brazing structural components of indoor/outdoor units (such as heat exchangers, compressors, expansion valves, and four-way valve assemblies), all refrigerant must first be recovered. It is essential to confirm that no refrigerant residue remains in the system, and all needle valves and globe valves must be fully opened. When brazing outdoors, check to ensure there is no refrigerant in the air (be cautious of evaporated refrigerant).

Furthermore, protect compressor terminals with metal plates during heating, and cool the expansion valve and four-way valve with wet towels (to dissipate heat) to prevent component damage. During brazing, the brazing material should be applied based on the principle of capillary action without melting the base material. If overheating causes holes or oxidation, do not re-braze or patch the component; instead, replace it entirely.

15.7.2 Pressure adjustment for vacuum pump

1. Cylinder with adjustment handle

①Check and confirm that the adjustment handle of Pressure Regulator No. 1 is loosened (by turning it counterclockwise). If the cylinder valve is opened while the pressure adjustment handle of the first pressure gauge is closed, the second pressure gauge may be damaged.

②Open the cylinder valve and check the remaining quantity using the first pressure gauge.

③Check the pressure on the second pressure gauge, then turn the adjustment handle clockwise to adjust the pressure.

- Second gauge pressure of Oxygen · · · · · · · · · · · 0.5 MPa (5.0 kgf/cm^2)
- Second gauge pressure of Propane · · · · · · · · · · 0.05 MPa (0.5 kgf/cm^2)

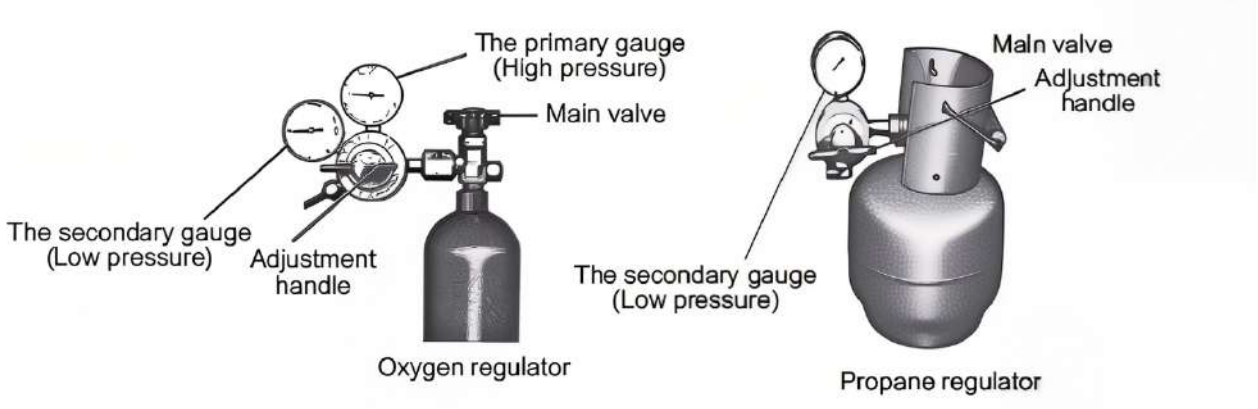

2. For cylinders without adjustment valves, the second gauge pressure is regulated by the regulator.

Check the valves on both sides of the torch, open the cylinder valve, and check the remaining refrigerant in the cylinder.

Note: Do not connect oil-containing components to the regulator's connection ports. In particular, use oil-free oxygen cylinder regulators. Do not disassemble or repair regulators or pressure gauges.

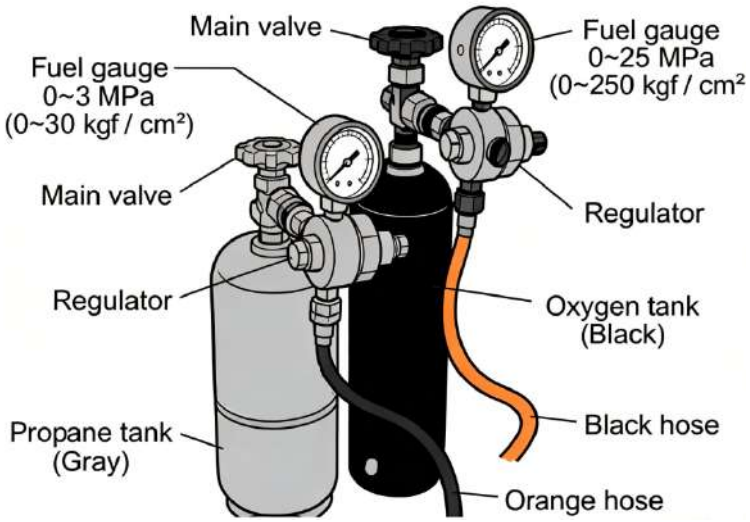

15.7.3 Checks to gas supply

Ensure there is no fire in the vicinity of the torch, then verify the gas supply.

1. Slightly open the torch's "propane valve", confirm that gas flows out from the torch nozzle, then close the "propane valve".

2. Gently open the torch's "oxygen valve", confirm that gas flows out from the torch nozzle, then close the "oxygen valve".

Check for gas leaks at the hose connections.

15.7.4 Flame adjustment

1. Gently open the torch's "propane valve" and ignite using a lighter. At this stage, the flame—composed solely of propane—will appear red.

2. Gradually open the torch's "oxygen valve" to mix in oxygen. Use the valves to adjust the propane and oxygen levels to achieve a flame suitable for brazing work.

If the white core of the flame splits into two, the torch nozzle may be clogged. In such cases, remove the torch tip and inspect it

.

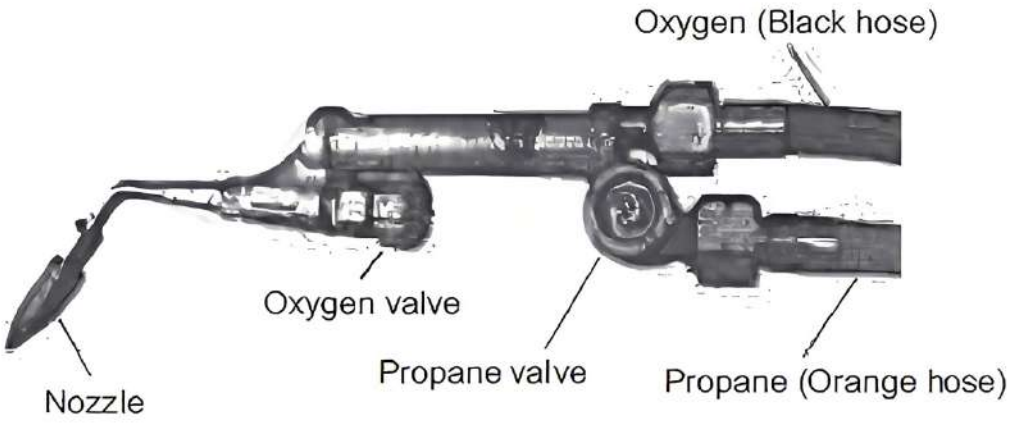

15.7.5 Flame types

Types of flame variations based on the ratio of propane to oxygen:

[Neutral flame]

Use this flame for brazing. It forms when oxygen and propane are mixed in the proper ratio, with minimal effect on the brazing metal.

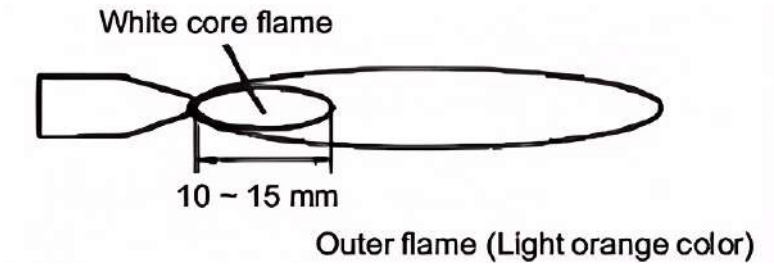

[Carburizing flame]

When propane is in excess, a white flame appears between the white core flame and the outer flame. This occurs due to insufficient oxygen, resulting in a high proportion of unburned propane. Carbon black generated during brazing may contaminate the surface of the brazing metal.

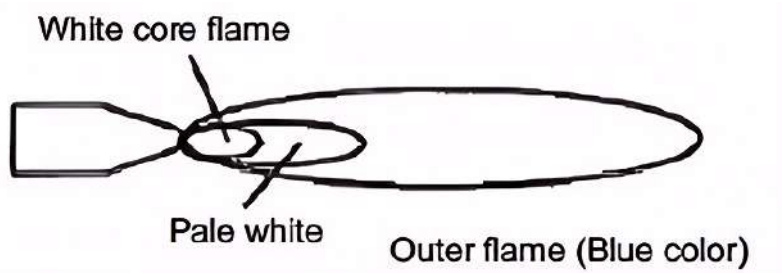

[Oxidizing flame]

Compared to the neutral flame, this flame contains more oxygen. Though smaller in size, it has the highest heat. However, the excess oxygen in the flame causes oxidation at the brazing point. Additionally, its high temperature may lead to holes or melting of the pipe.

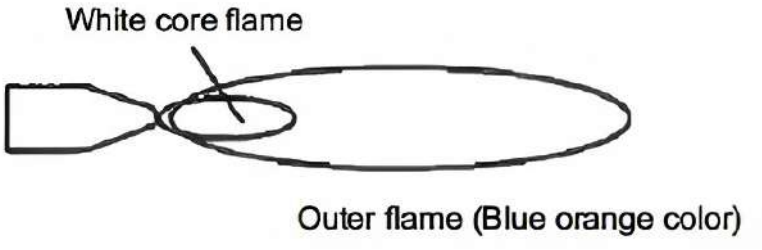

15.7.6 Shutting off the flame

[In case of short interruption]

1. Close the torch's "propane valve."
2. Close the torch's "oxygen valve."

[In case of completion]

1. As noted above, shut off the flame using the procedure for "short interruption."
2. Fully close the valves of the oxygen cylinder and propane cylinder.
3. Open the torch's "oxygen valve" and "propane valve" to release any remaining gas in the hoses.

Confirm that the first and second gauge pressures on the pressure regulators of the oxygen and propane cylinders read "zero."

15.7.7 Flux requirements

Use flux to protect the base material, as it serves the following purposes:

1. Remove impurities and oxide films from the metal substrate to enhance the fluidity of the brazing alloy.

2. Prevent oxidation of the metal surface during the brazing process.

3. Reduce the surface tension of the brazing material.

15.7.8 Nitrogen requirements

To prevent oxidation inside the pipes, conduct brazing operations under a nitrogen flow.

The flow rate should be 0.05 m³/h, or the pressure of the relief valve should be kept below 0.02 MPa (0.2 kgf/cm²).

15.7.9 Checking brazing (insertion) points

1. Brazing points must be free of impurities.

If dirt or oil adheres to the brazing point, the brazing filler metal will be unable to reach the joint, potentially resulting in poor weld quality.

2. Brazing points require sufficient gap space to leverage capillary action during brazing.

If the gap is too large, this capillary action may fail to occur, leading to poor welds as the brazing filler metal will not flow to form a proper joint.

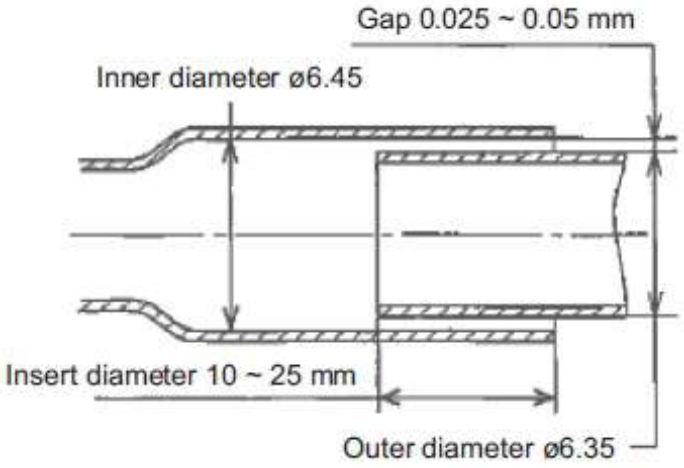

3. Appropriate insertion size. The general guideline for pipe insertion size is three times the diameter of the base material, though the specific insertion size must be determined with consideration to potential clogging of the brazing material. In general, for thin pipes, the insertion size should be increased to ensure welding stability and strength; for thick pipes, the insertion size also needs to be enlarged to accommodate the thicker base metal and create sufficient space for welding or brazing.

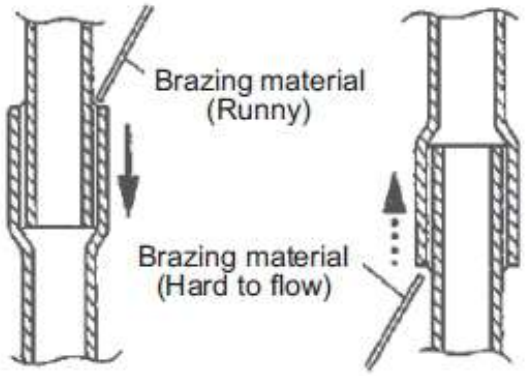

4. Brazing material flows from top to bottom. The brazing alloy easily flows toward the joint via capillary action. Furthermore, bending the brazing section of the capillary (dryer side) at an angle of approximately 120° starting 15 mm from the top of the pipe can prevent damage to the interior of the dryer and clogging of the brazing material caused by excessive insertion of the capillary.

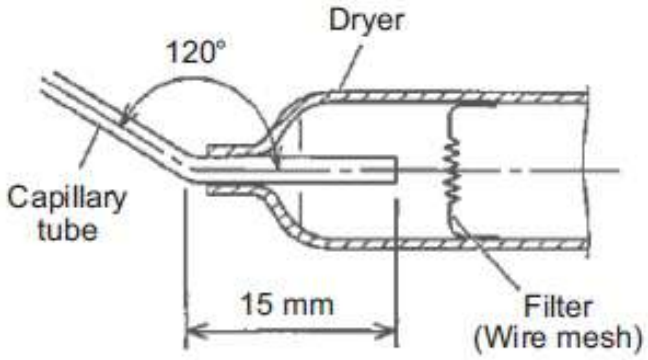

15.7.10 Brazing and heating

1. Direct the flame at the pipe with a larger heat capacity, so that the brazing material melts due to the pipe's heat. Heat the pipe to the brazing material's melting temperature. However, if overheating occurs, judge the temperature by the pipe's color to avoid melting the pipe.

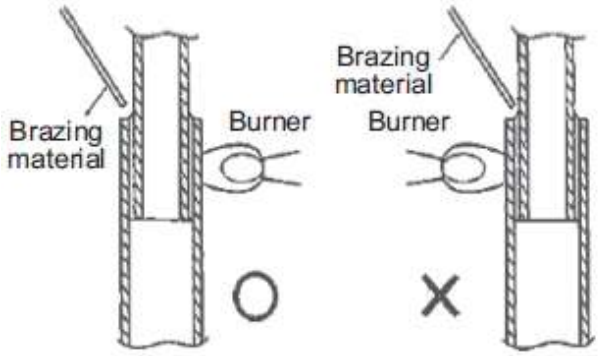

Preheating involves heating the base material to its melting temperature; this requires training to distinguish the color of the heated base material to prevent it from melting.

Color and temperature of copper pipe(Reference)

Turns red ・・・・・ 480℃

Dark red ・・・・・・650℃

Bright red ・・・・・760℃

Bright white red ・・・ 870℃

Melting temperature of copper ・・・・・・・・Approx. 1083℃

Highest temperature obtained in propane and oxygen ・・・・・・・・ Approx. 1083℃

It is important to heat the bonding parts evenly in a short time until the brazing temperature is reached in the following manner.

2. Direct the flame at the side with better heat transfer. If the pipe thickness is consistent, heat 30% of the iron and 70% of the copper to ensure the interior of the copper pipe reaches brazing temperature. Iron pipes have low heat transfer efficiency, meaning only the area directly exposed to the flame will reach high temperatures—this leads to pipe oxidation and adversely affects the flow of the brazing filler.

3. Apply the flame to the side with a larger heat capacity. When brazing thin pipes (such as capillaries and dryers), ensure the flame is directed at the dryer side (the thicker pipe side) to prevent heat damage to the capillary and dryer.

4. When brazing the compressor's connection pipes (suction and discharge), first remove the soundproof panel and fan. Position the compressor bracket vertically (to prevent refrigeration oil leakage from the compressor) and apply the flame from the compressor body side.

15.7.11 Brazing terminology

Pin hole –> small holes produced on the surface of the brazing metal.

Wet temperature –> the liquidus temperature at which the brazing material begins to flow out through heating.

Gas hole –> cavities formed by gas in the brazing material at the brazing part (gas reservoir).

Pit –> small dents produced on the outer surface of the welded part due to gas holes.

Void ratio –> the brazing filler metal cannot fully contact the brazing parts. Cannot be identified from the outside.

15.7.12 Selection of brazing materials

Use bag-type brazing materials (silver brazing alloy) to improve welding performance.

Category	JIS Default Number	Composition (%)						Temperature (℃)			Tensile Strength (Reference)		Characteristics and Applications
		Ag	Cu	Zu	Cd	Ni	P	Solidification Temperature	Evaporation Temperature	Brazing Application Temperature	Kgf•cm^2	Base Material	
BAg	BAg•1A	49.0 ~ 51.0	14.5 ~ 16.5	14.5 ~ 18.5	17.0 ~ 19.0	-	-	Approx. 625	Approx. 635	635 ~ 760	45.5	S20C	Good fluidity at low temperatures, best for small joint gaps in general.
	BAg•1	44.0 ~ 56.0	14.0 ~ 16.0	14.0 ~ 18.0	23.0 ~ 25.0	-	-	Approx. 605	Approx. 620	620 ~ 760	45.5	S20C	Similar performance to Bag•1A, suitable for all base materials except light metals.
	BAg•2	34.0 ~ 36.0	25.0 ~ 27.0	19.0 ~ 23.0	17.0 ~ 19.0	-	-	Approx. 605	Approx. 700	620 ~ 760	45.5	S20C	It is a universal form of brazing filler metal, suitable for slightly larger gap connections.
	BAg•3	48.0 ~ 51.0	14.5 ~ 16.5	19.0 ~ 23.0	15.0 ~ 17.0	15.0 ~ 17.0	-	Approx. 630	Approx. 690	620 ~ 760	620 ~ 760	SS ~ SUS	Good corrosion resistance in stainless steel base brazing, suitable for brazing tungsten carbide, aluminum bronze, and copper.
BCuP	BCuP-2	-	Residual	-	-	-	6.8 ~ 7.5	Approx. 710	Approx. 785	690 ~ 815	21 ~ 24.5	Cu	Good fluidity, suitable for copper pipe brazing.
	BCuP-3	4.8 ~ 5.2	Residual	-	-	-	5.8 ~ 6.7	Approx. 645	Approx. 815	720 ~ 815	21 ~ 24.5	Cu	Suitable for brazing when joint spacing is not constant.
	BCuP-5	14.5 ~ 15.5	Residual	-	-	-	5.8 ~ 6.7	5.8 ~ 6.7	Approx. 800	705 ~ 815	21 ~ 24.5	Cu	For brazing copper and copper without using flux, but not possible to braze base materials.

Note:

BCuP (brazing copper phosphorus) easily reacts with sulfur, forming brittle compounds that are water-soluble, which can lead to gas leaks. In hot spring areas, use other brazing materials or apply protective paint to the surface.

16 Troubleshooting

16.1 Overview: troubleshooting

This chapter outlines the steps to take when issues occur.

It includes guidance on:

- Solving problems based on symptoms
- Solving problems based on error codes

Before troubleshooting

conduct a thorough visual inspection of the unit to check for obvious defects, such as loose connections or faulty wiring.

16.2 Precautions when troubleshooting

 **DANGER: RISK OF ELECTROCUTION**
 **DANGER: RISK OF BURNING/SCALDING**
 **WARNING**
1. When inspecting the unit's switch box, ALWAYS ensure the unit is disconnected from the mains. Turn off the corresponding circuit breaker.
2. If a safety device is activated, stop the unit and identify the cause of activation before resetting it. NEVER bypass safety devices or adjust their settings to values other than the factory defaults. If you cannot determine the cause of the issue, contact your dealer.
3. To prevent hazards from accidental resetting of the thermal cut-out: The appliance's power supply MUST NOT be routed through an external switching device (such as a timer) or connected to a circuit that is regularly turned on and off by the utility provider.

16.3 Solving problems based on symptoms

16.3.1 Symptom: The unit is NOT heating or cooling as expected

Possible causes	Corrective action
The temperature setting is NOT correct	Check the temperature setting on the remote controller.
The water flow is too low	Check and make sure that: - All shut-off valves of the water circuit are completely open. - The water filters are clean. Clean if necessary. - There is no air in the system. Purge air if necessary. - The water pressure is >1 bar. - The expansion vessel is NOT broken. - The valve (if equipped) of the water circuit

	towards the expansion vessel is open. - The resistance in the water circuit is NOT too high for the pump If the problem persists after you have conducted all of the above checks, contact your dealer. In some cases, it is normal that the unit decides to use a low water flow.
The water volume in the installation is too low	Make sure that the water volume in the installation is above the minimum required value
Fins are dirty	Clean the evaporator coil
Air inlet blocked	Remove any objects obstructing air circulation of the unit.
Insufficient refrigerant	Check the unit for leaks, repair if any. Evacuate all refrigerant and recharge the unit with correct amount.

16.3.2 Symptom: Hot water does NOT reach the desired temperature

Possible causes	Corrective action
One of the tank temperature sensors is broken.	See the service manual of the unit for the corresponding corrective action.

16.3.3 Symptom: The compressor does NOT start

Possible causes	Corrective action
No power supply	Check the power supply
Fuse blown or circuit breaker tripped	Check if the unit is open-circuited or grounded. Then replace the fuse, reset the circuit breaker, and check if the circuit is stable or well connected.
Some protection activated	Check which protection is working, clear the protection, then restart the unit.
Loose wiring	Check wire connections and tighten screws on terminals
Compressor failure	Replace the compressor
The unit may operate out of its operating range	Too low ambient temperature

16.3.4 Symptom: The system is making gurgling noises after commissioning

Possible causes	Corrective action
There is air in the system.	Purge air from the system.
Incorrect hydraulic balance.	To be performed by the installer:

	- Perform hydraulic balancing to assure that the flow is correctly distributed between the emitters. - If hydraulic balancing is not sufficient, change the pump limitation settings The water pressure must be larger than or equal to 1.5 bar. Verify that the expansion vessel is not broken. Verify that the pre-pressure of the expansion vessel is set correctly.
Various malfunctions.	Check if or is displayed on the home screen of the user interface.
Valves in the water system are not fully open	Check all valves to ensure they are fully open
Water filter dirty or clogged	Clean the water filter

16.3.5 Symptom: The pump is making noise (cavitation)

Possible causes	Corrective action
There is air in the system.	Purge air from the system.
The water pressure at the pump inlet is too low	Check and make sure that: - The water pressure is >1 bar. - The water pressure sensor is not broken. - The expansion vessel is NOT broken. - The valve (if equipped) of the water circuit towards the expansion vessel is open. - The pre-pressure setting of the expansion vessel is correct

16.3.6 Symptom: The pressure relief valve opens

Possible causes	Corrective action
The expansion vessel is broken	Replace the expansion vessel.
The valve (if equipped) of the water circuit towards the expansion vessel is closed.	Open the valve.
The water volume in the installation is too high	Make sure that the water volume in the installation is below the maximum allowed value
The water circuit head is too high	The water circuit head is the difference in height between the indoor unit and the highest point of the water circuit. If the indoor unit is located at the highest point of the installation, the installation height is considered 0 m. The maximum water circuit head is 10 m. Check the installation requirements.

Water pressure in the installation higher than 0.3MPa.	Make sure that the water pressure in the installation is within 0.10 to 0.20 MPa.

16.3.7 Symptom: The water pressure relief valve leaks

Possible causes	Corrective action
Dirt is blocking the water pressure relief valve outlet	Check whether the pressure relief valve works correctly by turning the red knob on the valve counterclockwise: - If you do NOT hear a clacking sound, contact your dealer. - If the water keeps running out of the unit, close both the water inlet and outlet shut-off valves first and then contact your dealer.

16.3.8 Symptom: Insufficient space heating capacity at low outdoor temperature.

Possible causes	Corrective action
The backup heater operation is not activated	Check the following: - The backup heater operation mode is enabled. - The backup heater overcurrent circuit breaker is on. If not, turn it back on.
The backup heater equilibrium temperature has not been configured correctly	Increase the equilibrium temperature to activate the backup heater operation at a higher outdoor temperature.
There is air in the system.	Purge air manually or automatically.

16.3.9 Symptom: The pressure at the tapping point is temporarily unusually high.

Possible causes	Corrective action
Failing or blocked pressure relief valve.	- Flush and clean the complete tank including the piping between pressure relief valve and the cold water inlet. - Replace the pressure relief valve.

16.4 Troubleshooting Based on error codes

If the unit encounters a problem, the user interface will display an error code. It is important to understand the issue and take appropriate measures before resetting the error code. This should be performed by a licensed installer or your local dealer. This chapter provides an overview of most possible error codes and their descriptions as they appear on the user interface.

Error code table		
Power Protection		
Error code	**Error name**	**Note**
E1	Phase Reversal Protection	For three-phase model
E7	Phase Loss Protection	For three-phase model
Sensor Fault		
Error code	**Error name**	**Note**
E12	DHW Tank Temp. Sensor Fault	
E14	TWout3_SENSOR Fault	Not applicable
E15	Floor Heating Inlet Temp. Sensor Fault	Not applicable
E80	Buffer Tank Top Temp. Sensor Fault	
E81	Buffer Tank Bottom Temp. Sensor Fault	Not applicable
E82	Solar Water Heater Temp. Sensor Fault	Not applicable
E84	Air Conditioner Total Outlet Temp. Sensor Fault	Not applicable
E85	Room Temp. Sensor Fault	
E101	Coil Temp. Sensor Fault	
E102	Exhaust Temp. Sensor Fault	
E104	High Pressure Sensor Fault	
E105	Low Pressure Sensor Fault	
E108	Suction Temp. Sensor Fault	
E109	Cooling after EEV Temp. Sensor Fault	
E127	EVI Inlet Temp. Sensor Fault	Not applicable
E128	EVI Outlet Temp. Sensor Fault	Not applicable
E129	Refrigerant Gas Side Temp. Sensor Fault	Not applicable
E130	Refrigerant Liquid Side Temp. Sensor Fault	Not applicable
E161	Ambient Temp. Sensor Fault	
E168	Plate Heat Exchanger Outlet Temp. Sensor Fault	
E171	Plate Heat Exchanger Inlet Temp. Sensor Fault	
E172	Total Outlet Temp. Sensor Fault	Not applicable
E182	R290 Sensor Fault	
E183	R290 Leak Alarm	
Communication Fault		
Error code	**Error name**	**Note**
E2	EEPROM Data Error	
E6	System Maintenance Data Error	
E83	Display Communication Fault	
E120	EC1 Communication Fault	Not applicable
E122	EC2 Communication Fault	Not applicable
E124	Inverter Board Communication Fault	
E178	Communication Fault Between Mainboard and Expansion Board	
E179	Low Protocol Version Alarm	
E181	Abnormal Device Configuration	
E185	Model configuration failed	

E186	Communication Failure Between Mainboard and Expansion Board	
Refrigerant System Protection		
Error code	**Error name**	**Note**
E10	DHW Heater Overheat Protection	
E97	Compressor Low Pressure Protection	
E98	Compressor High Pressure Protection	
E103	Exhaust Temp. Overheat Protection	
E106	Pressure Value Too Low Protection	
E107	Pressure Value Too High Protection	
E110	Suction Temp. Too Low Protection	
E111	Frequent Defrosting Protection	
E112	Abnormal Suction-exhaust Temp. Difference Protection	
E113	Low Evaporation Pressure Protection In Cooling	
E115	Low Ambient Temp. Protection	
E116	Plate Heat Exchanger Inlet Water Temp. Too Low	
E117	Plate Heat Exchanger Inlet Water Temp. Too High	
E118	Fan 1 Speed Abnormal Fault	
E119	Fan 2 Speed Abnormal Fault	Not applicable
E121	EC1 Fault	Not applicable
E123	EC2 Fault	Not applicable
E125	Inverter Board Fault	
E126	Inverter Model Setting Protection	
E131	High Evaporation Temp. Protection	
E133	MPPT1 Fault	Not applicable
E134	MPPT2 Fault	Not applicable
E164	Auxiliary Electric Heater Overload Protection	
E165	Overload Protection	Not applicable
E166	Plate Heat Exchanger Outlet Water Temp. Too Low	
E167	Plate Heat Exchanger Outlet Water Temp. Too High	
Water Circuit Protection		
Error code	**Error name**	**Note**
E169	Insufficient Water Flow Protection	
E174	Plate Heat Exchanger Inlet/Outlet Temp. Difference Large Protection	
E175	Plate Heat Exchanger Inlet/Outlet Temp. Difference Abnormal Protection	
E176	Inverter Water Pump Alarm	
E180	Inverter Water Pump Fault	
E184	Flow Sensor Fault	
Inverter Board Fault		
Error code	**Error name**	**Note**
Er.ocb（1）	Overcurrent During Inverter Board Startup Protection	
Er.ocA（2）	Overcurrent Protection for Inverter Board Acceleration Operation	
Er.ocd（3）	Overcurrent Protection for Inverter Board Deceleration Operation	

Er.ocn（4）	Overcurrent Protection for Inverter Board Constant-Speed Operation	
Er.ouA（5）	Overvoltage Protection for Inverter Board Acceleration Operation	
Er.oud（6）	Overvoltage Protection for Inverter Board Deceleration Operation	
Er.oun（7）	Overvoltage Protection for Inverter Board Constant-Speed Operation	
Er.ouE（8）	Overvoltage Protection for Inverter Board During Standby	
Er.dcL（9）	Undervoltage Protection for Inverter Board During Operation	
Er.PLI（10）	Input Phase Loss Protection for Inverter Board	
Er.PLo（11）	Output Phase Loss Protection for Inverter Board	
Er.FoP（12）	Protection of inverter power devices	
Er.oHI（13）	Inverter Board Overheat Protection	
Er.oLI（14）	Inverter Board Overload Protection	
Er.oLL（15）	Inverter Motor Overload Protection	
Er.EEF（16）	PFC Start Failed on Inverter Board	
Er.oLP（17）	Inverter Motor Overload Protection	
Er.ULd（18）	Inverter Motor Overspeed Protection	
Er.Co1（19）	Inverter Board D-Axis Overcurrent Protection	
Er.Co2（20）	Inverter Board Q-Axis Overcurrent Protection	
Er.EEP（21）	Inverter board parameter storage failed	
Er.CFE（22）	Inverter Board Communication Fault	
Er.ccF（23）	Inverter Board Current Detection Fault	
Er.ArF（24）	Inverter Board PFC Temp. Fault	
Er.Aco（25）	Inverter Board Start Motor Locked-Rotor Protection	
Er.PGo（26）	Inverter Board Running Motor Locked-Rotor Protection	
Er.rHo（27）	Inverter Board Heat Dissipation Temp. Fault	
Er.Abb（28）	Inverter Board Out of Speed Fault	
Er.Io1（29）	Inverter Board Interrupt Fault 1	
Er.Io2（30）	Inverter Board Interrupt Fault 2	
Er.PnL（31）	Starting Rotor Vibration Over-limit Protection	
Er.rr1（32）	Operating Rotor Vibration Over-limit Protection	
Er.PF1（33）	Inverter Board PFC Overcurrent Protection	
Er.PF2（34）	PFC Overcurrent Protection	
Er.PF2（35）	PFC Effective Current Overload Protection	
Er.Seq (36)	Input Power Phase Incorrect Fault	
Er.FmA (37)	Input Power Frequency Too High Protection	
Er.Fmi (38)	Input Power Frequency Too Low Protection	
Er.AcH (39)	Input Power Overvoltage Protection	
Er.AcL (40)	Input Power Undervoltage Protection	
Er.Invt(41)	Input Three-Phase Voltage Distortion Protection	
Er.Invt(42)	Output Power Overvoltage Protection	
Er.Invt(43)	Charging Circuit Abnormal Protection	
Er.Invt(44)	TASK2 Overflow Fault	
Er.Invt(45)	TASK2 Operational Fault	

Note: Below are troubleshooting steps for some common faults. For faults not listed here, please contact the supplier for resolution.

16.4.1 E1 Troubleshooting

Description

Error code		E1(For 3Ph unit)
Description		Phase Reversal Protection
Triggering		At least one of L1/L2/L3/N misconnected
Relative ports and locations	Terminal blocks	 

Procedure

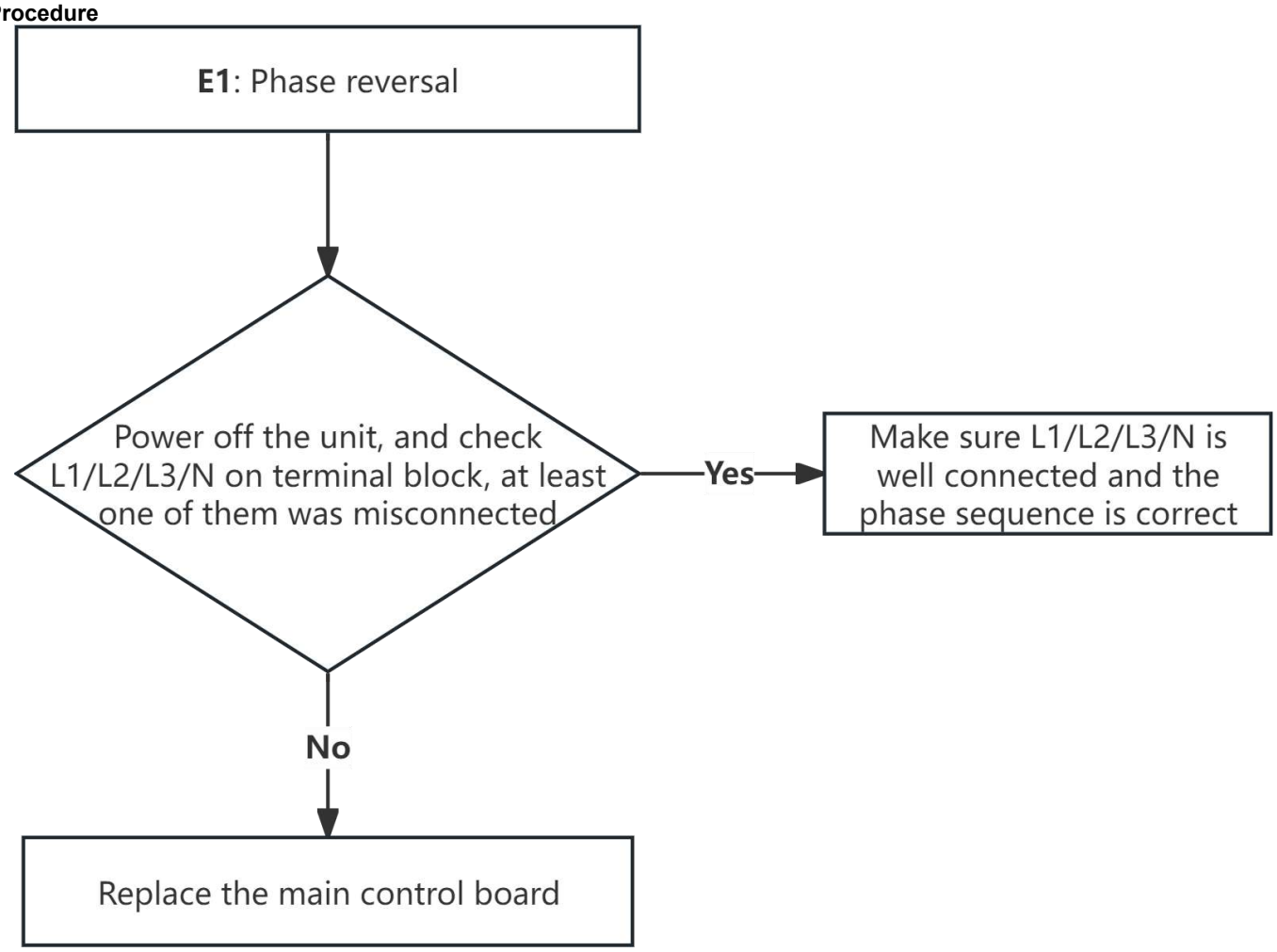

16.4.2 E7 Troubleshooting

Description

Error code		E7
Description		Phase Loss Protection
Triggering		At least one of L1/L2/L3/N disconnected
Relative ports and locations	Terminal blocks	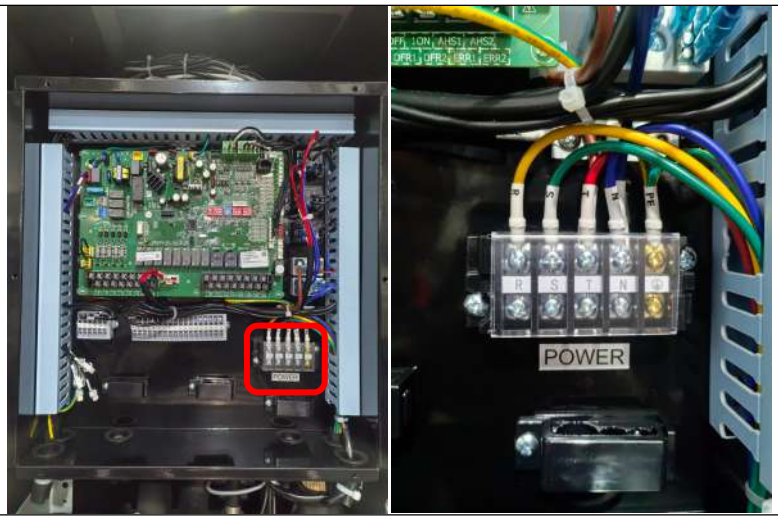

Procedure

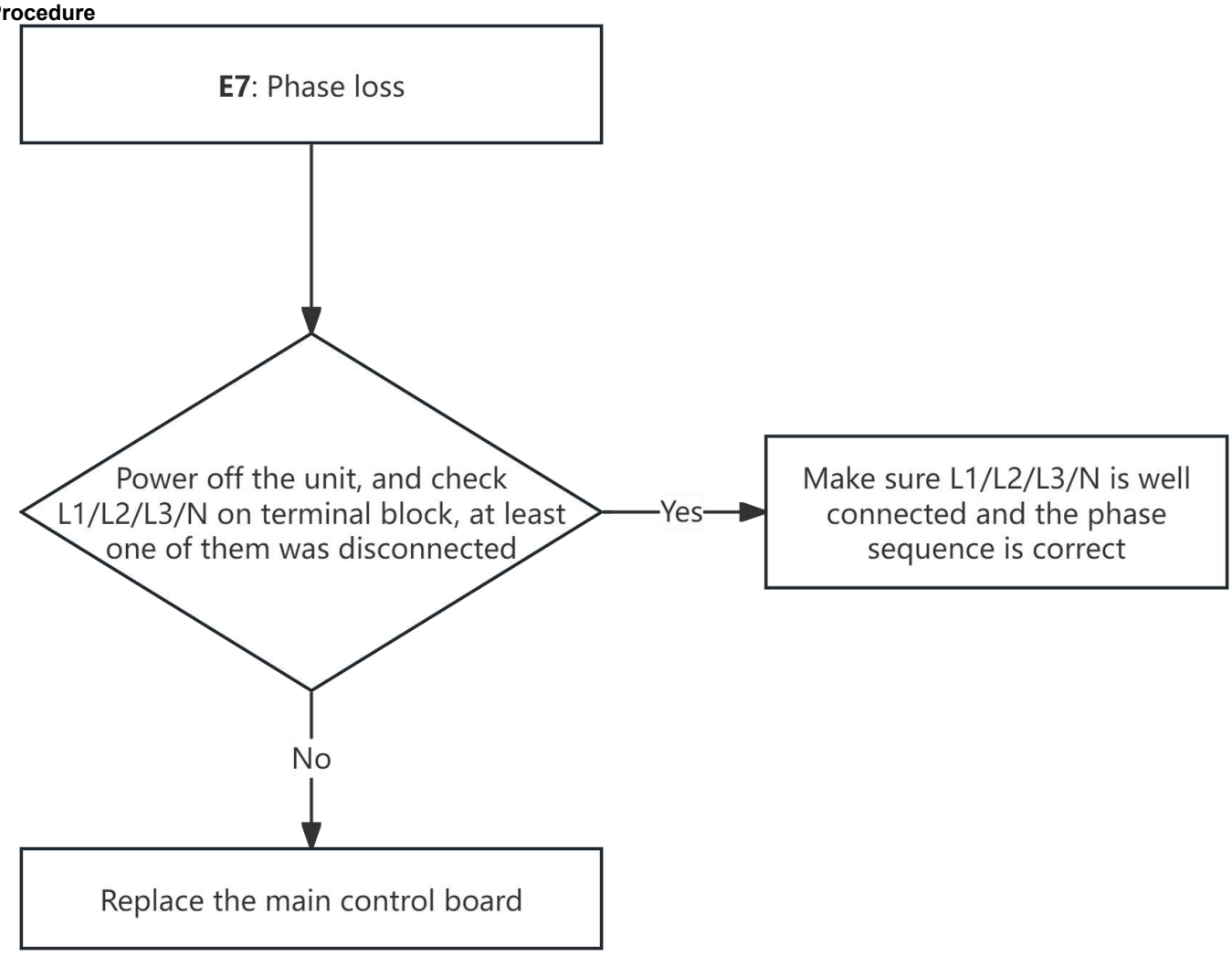

16.4.3 E12, E80 Troubleshooting

Description

Error code	Description	Port	Location (Main Control PCB)
E12	DHW Tank Temp. Sensor Fault	AI5C	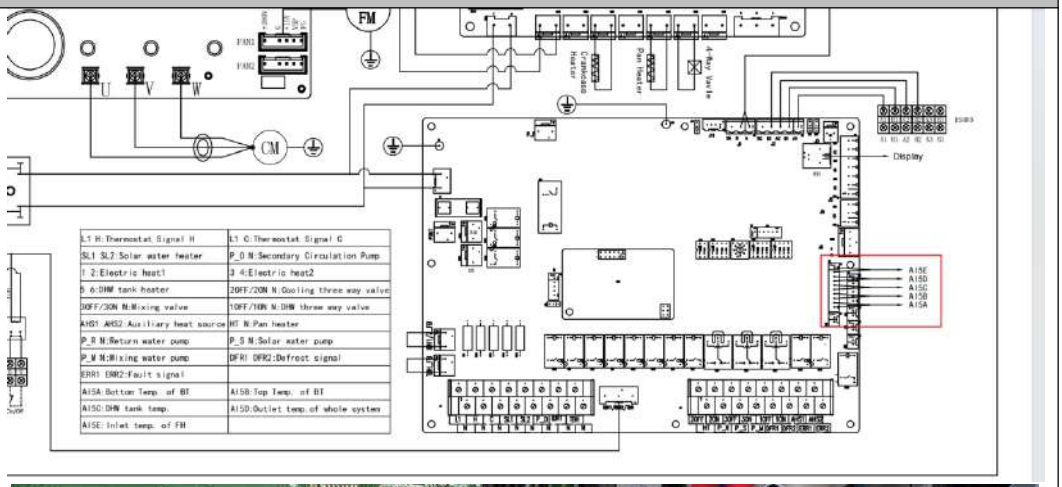 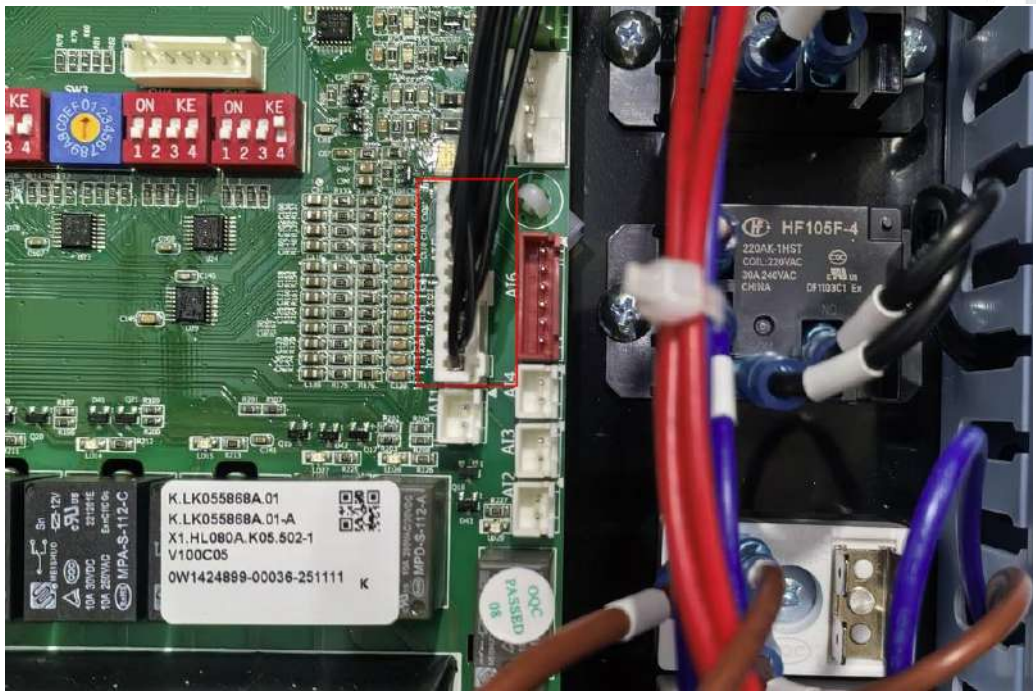
E80	Buffer Tank Top Temp. Sensor Fault	AI5B	

Procedure

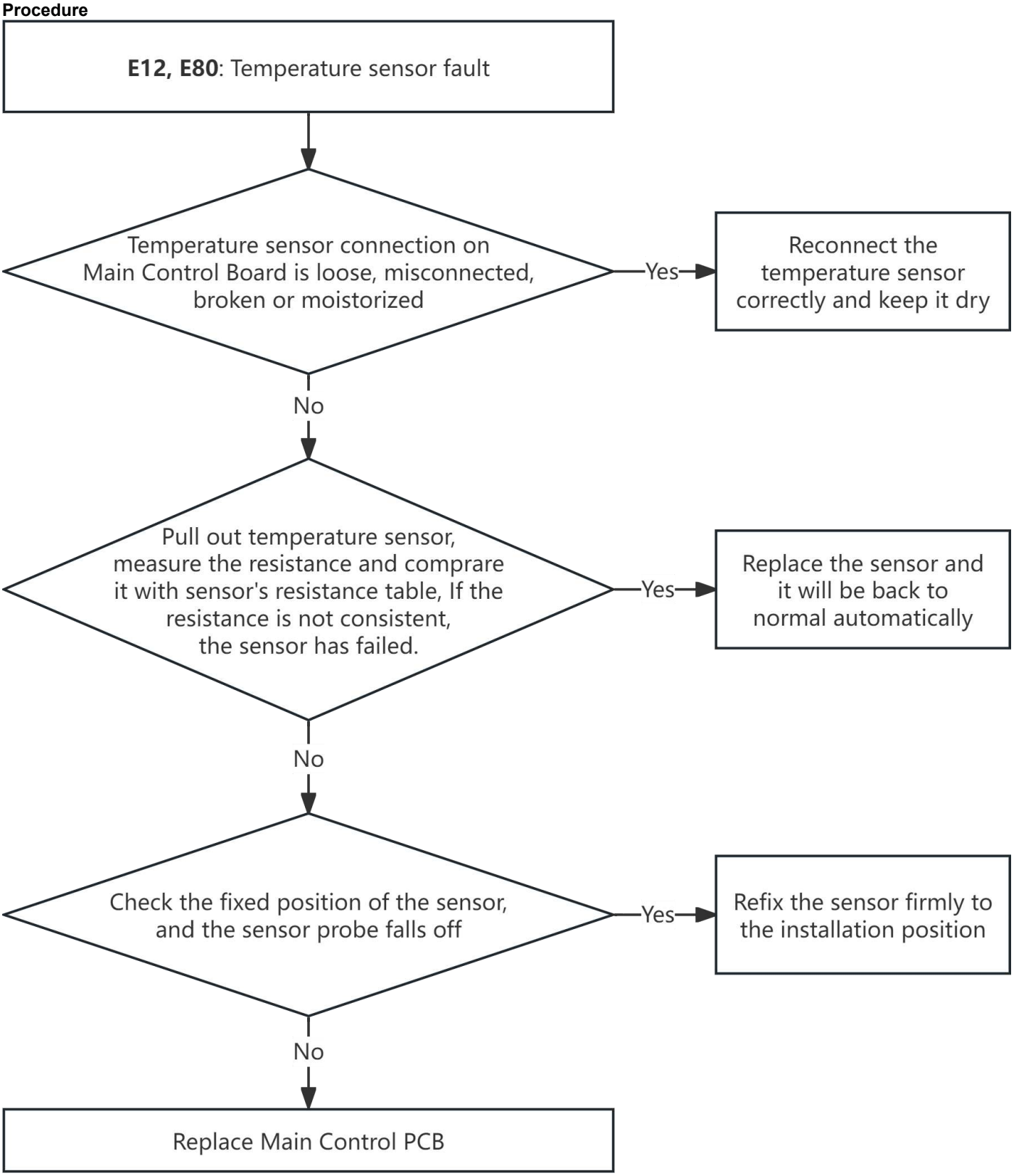
E12, E80: Temperature sensor fault
Temperature sensor connection on Main Control Board is loose, misconnected, broken or moistorized
Yes
Reconnect the temperature sensor correctly and keep it dry
No
Pull out temperature sensor, measure the resistance and comprare it with sensor's resistance table, If the resistance is not consistent, the sensor has failed.
Yes
Replace the sensor and it will be back to normal automatically
No
Check the fixed position of the sensor, and the sensor probe falls off
Yes
Refix the sensor firmly to the installation position
No
Replace Main Control PCB

16.4.4 E104, E105, E182 Troubleshooting

Description

Error code	Description	Port	Location (Main Control PCB)
E182	R290 Sensor Fault	J9	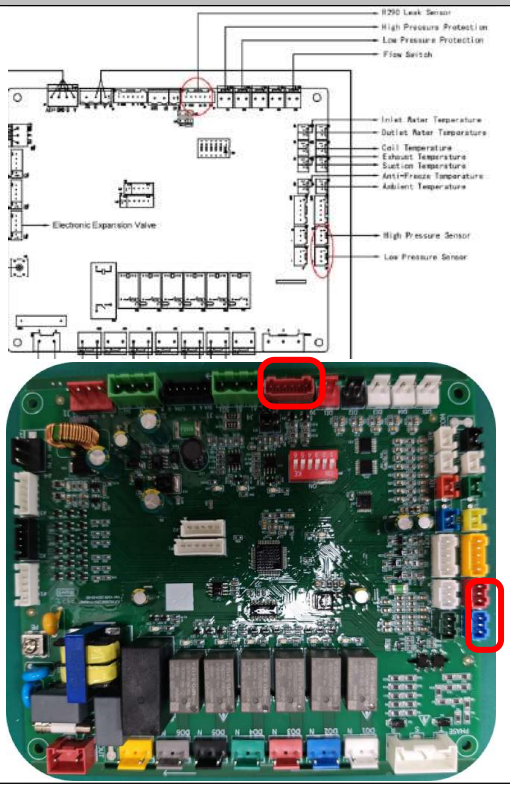
E104	High Pressure Sensor Fault	J5	
E105	Low Pressure Sensor Fault	J6	

Procedure

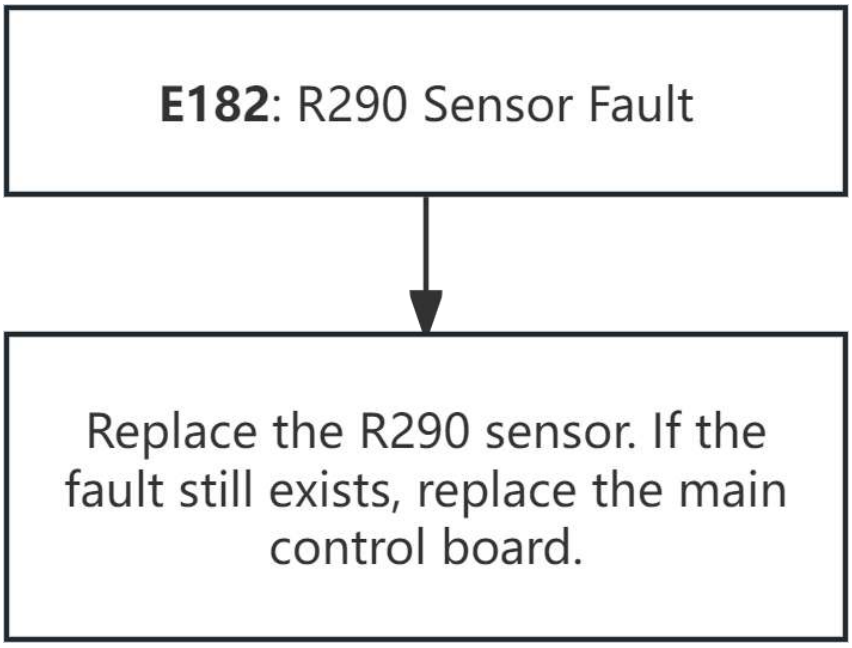

E104, E105: Pressure sensor fault

Pressure sensor connection on Main Control PCB is loose, misconnected, broken or moistorized

Yes → Reconnect the pressure sensor correctly and keep it dry

No

Measure the output voltage of sensor, and its consistant with the curve(As shown below)

Yes → Replace Main Control Board

No

Replace pressure sensor

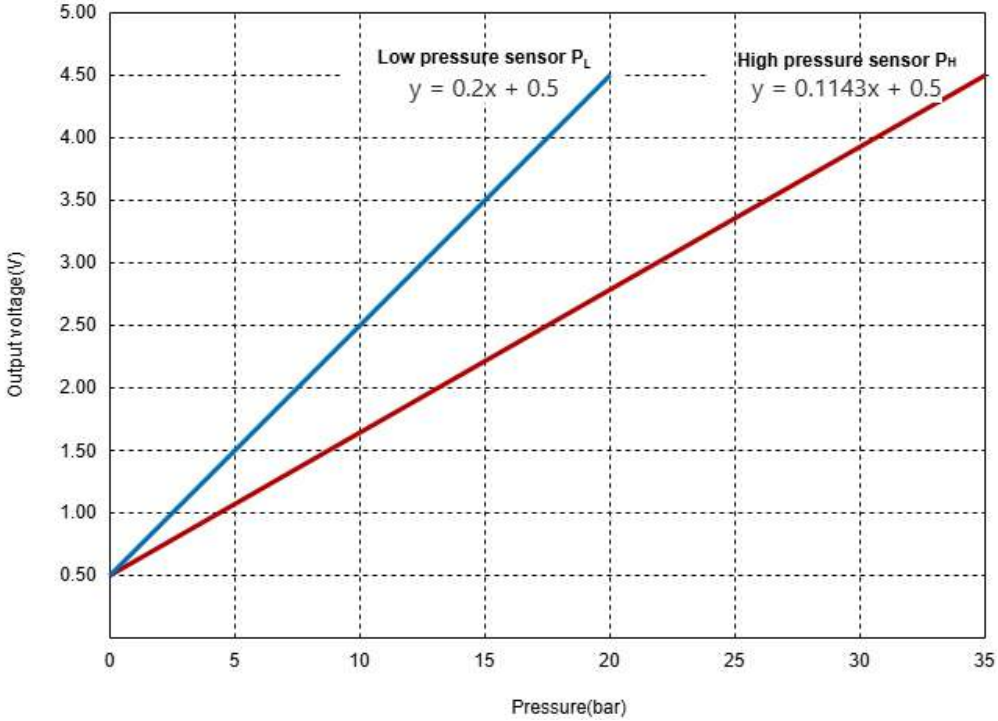

16.4.5 E101, E102, E108, E109, E161, E168, E171 Troubleshooting

Description

Error code	Description	Port	Location (Main Control PCB)
E101	Coil Temp. Sensor Fault	AI2	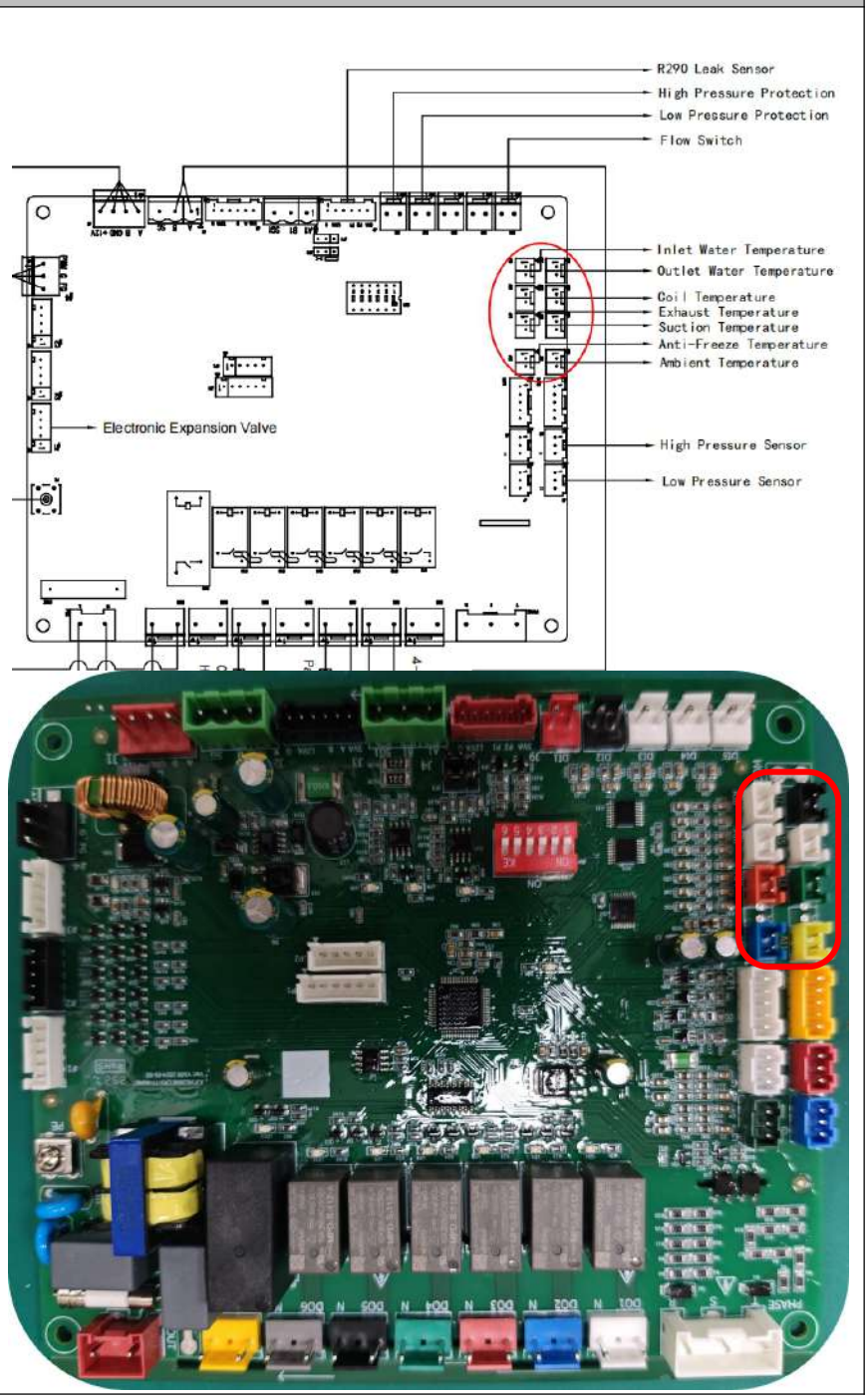
E102	Exhaust Temp. Sensor Fault	AI4	
E108	Suction Temp. Sensor Fault	AI3	
E161	Ambient Temp. Sensor Fault	AI1	
E168	Plate Heat Exchanger Outlet Temp. Sensor Fault	AI7	
E171	Plate Heat Exchanger Inlet Temp. Sensor Fault	AI8	

Procedure

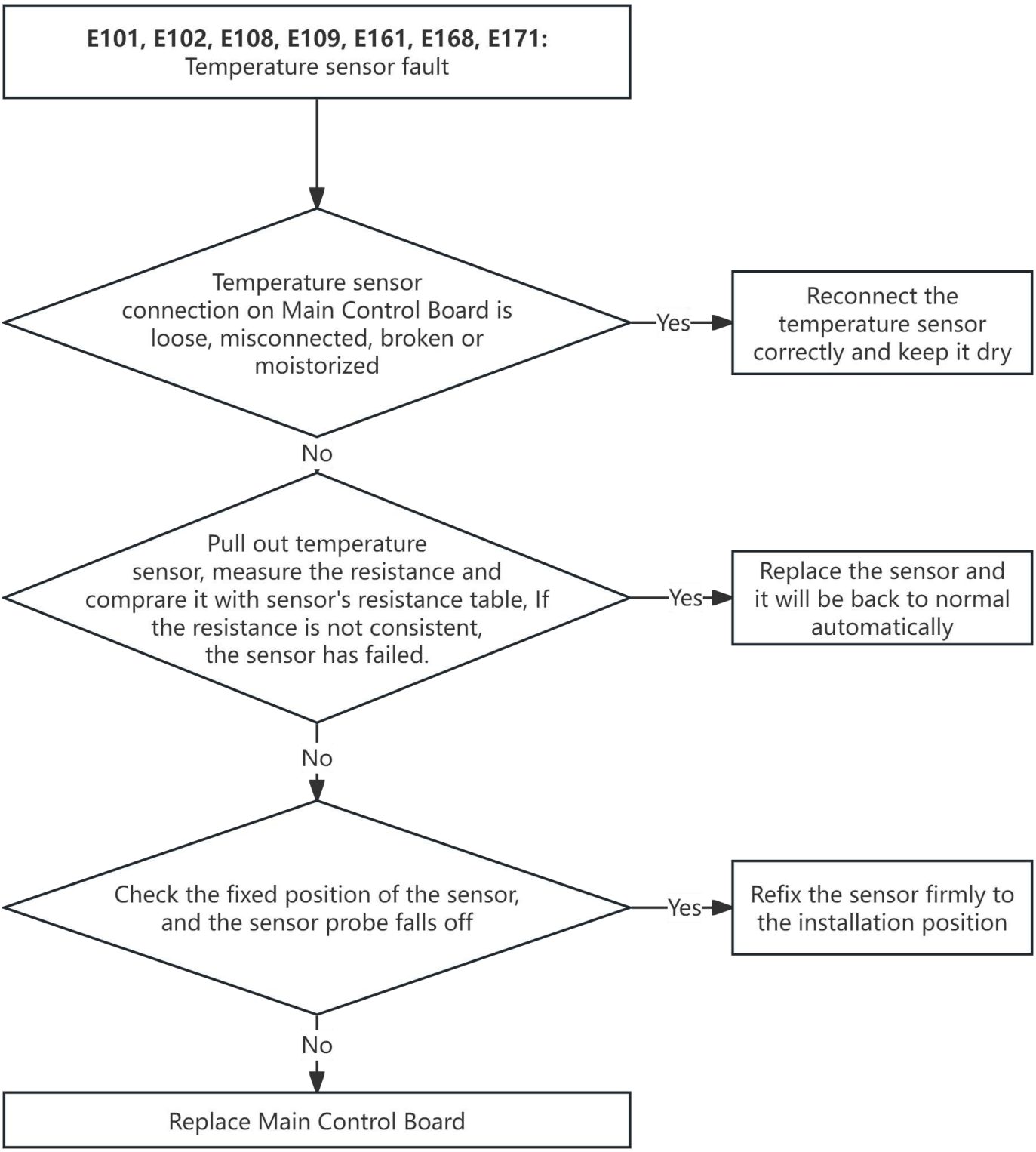
E101, E102, E108, E109, E161, E168, E171:
Temperature sensor fault
Temperature sensor connection on Main Control Board is loose, misconnected, broken or moistorized
Yes
Reconnect the temperature sensor correctly and keep it dry
No
Pull out temperature sensor, measure the resistance and comprare it with sensor's resistance table, If the resistance is not consistent, the sensor has failed.
Yes
Replace the sensor and it will be back to normal automatically
No
Check the fixed position of the sensor, and the sensor probe falls off
Yes
Refix the sensor firmly to the installation position
No
Replace Main Control Board

16.4.6 E83 Troubleshooting

Description

Error code		E83
Description		Communication fault between display and Main Control Board
Triggering		Main Control Board side: Communication failure with display lasts 2 min Display side: No communication reply from Main Control PCB for 1 min
Relative ports and locations	J3	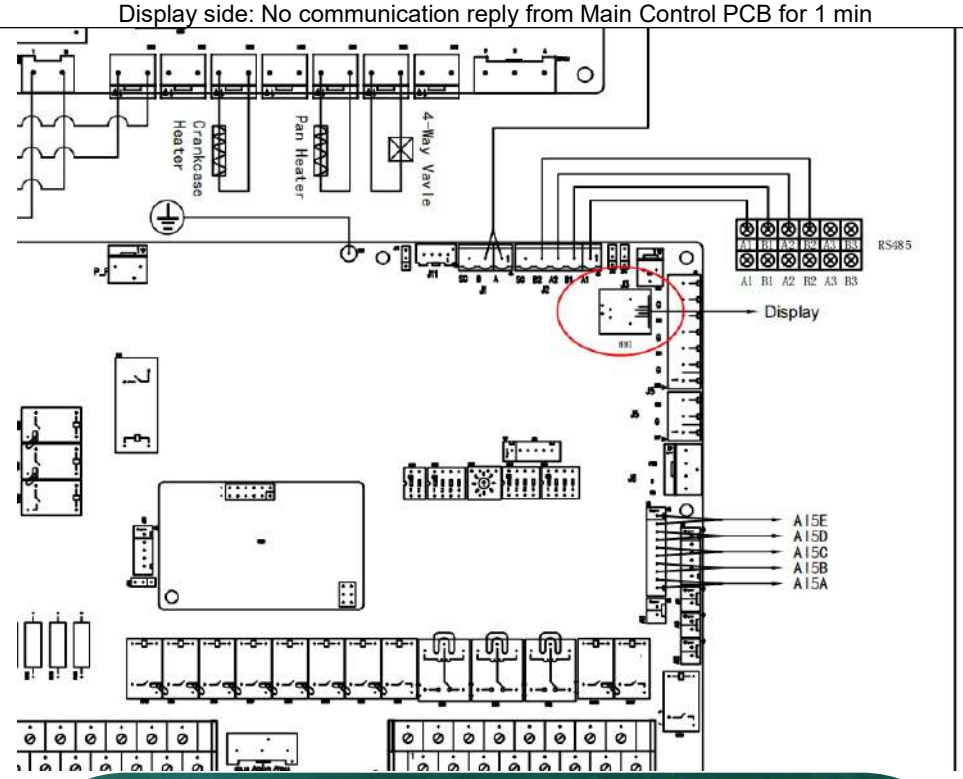 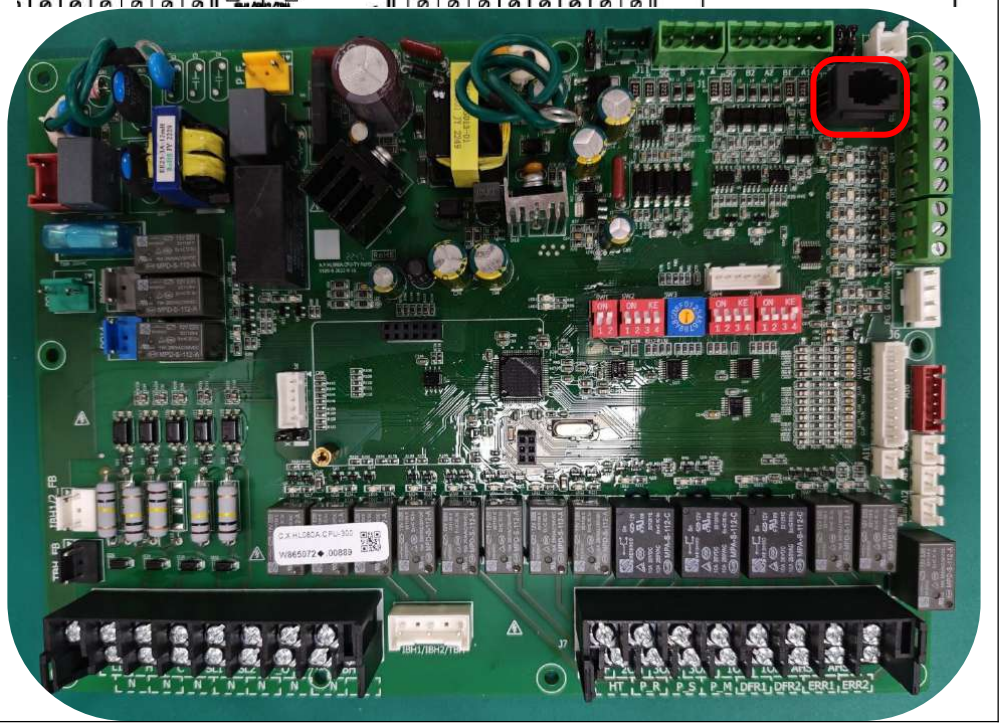

Procedure

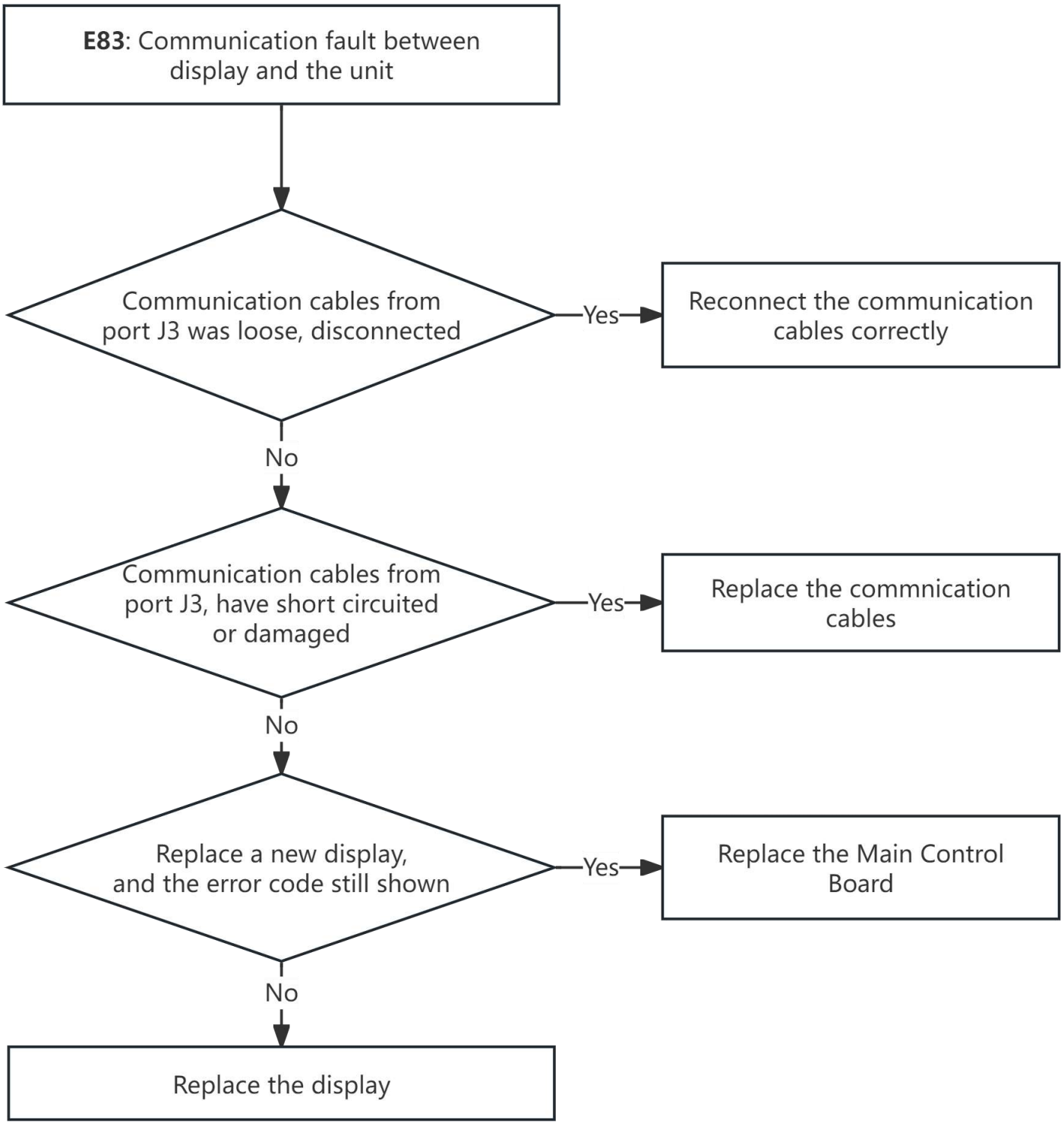
E83: Communication fault between display and the unit
Communication cables from port J3 was loose, disconnected
Yes
Reconnect the communication cables correctly
No
Communication cables from port J3, have short circuited or damaged
Yes
Replace the commnication cables
No
Replace a new display, and the error code still shown
Yes
Replace the Main Control Board
No
Replace the display

16.4.7 E124 Troubleshooting

Description

Error code		E124
Description		Communication fault between Inverter Board and Main Control Board
Triggering		Communication failure lasts 1 min
Relative ports and locations	Main Control Board(J1)	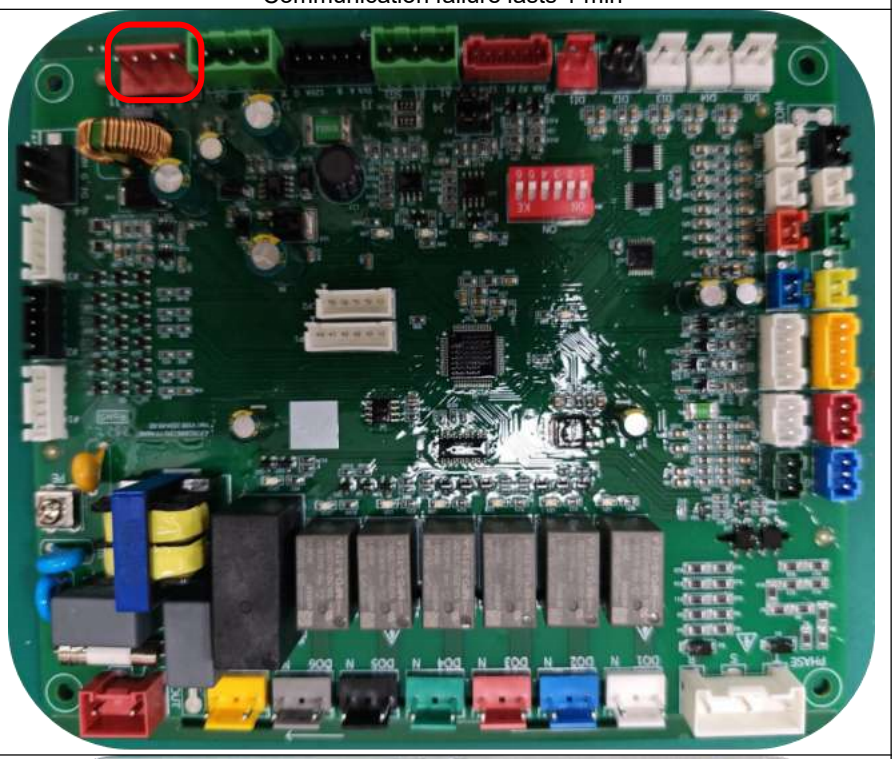
	Inverter Board(J4)	

Procedure

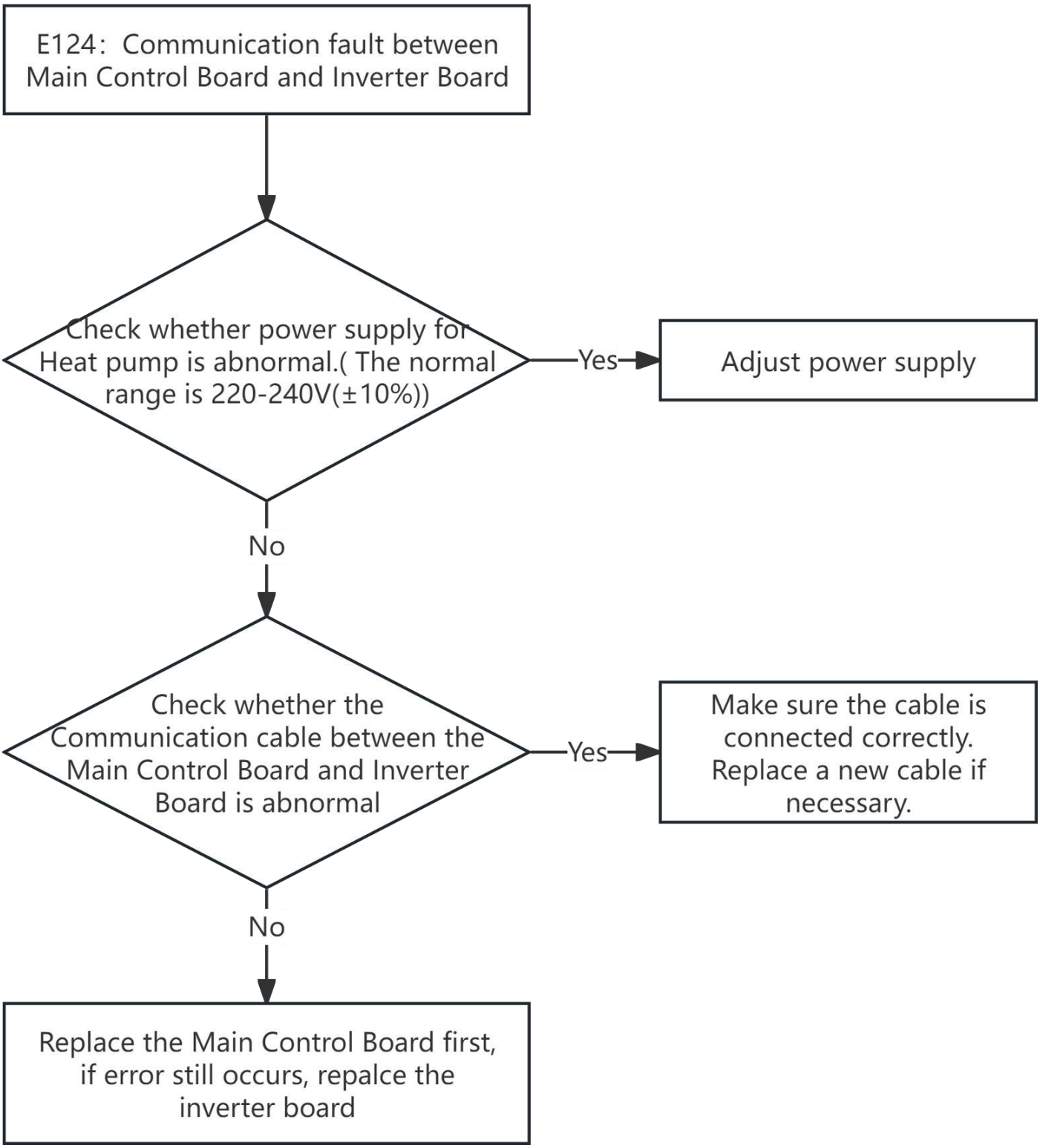
E124: Communication fault between Main Control Board and Inverter Board
Check whether power supply for Heat pump is abnormal.(The normal range is 220-240V(±10%))
Yes
Adjust power supply
No
Check whether the Communication cable between the Main Control Board and Inverter Board is abnormal
Yes
Make sure the cable is connected correctly. Replace a new cable if necessary.
No
Replace the Main Control Board first, if error still occurs, repalce the inverter board

16.4.8 E178 Troubleshooting

Description

Error code		E178
Description		Communication fault between Expansion Board and Main Control Board
Triggering		Communication failure lasts 1 min
Relative ports and locations	Main Control Board(J2)	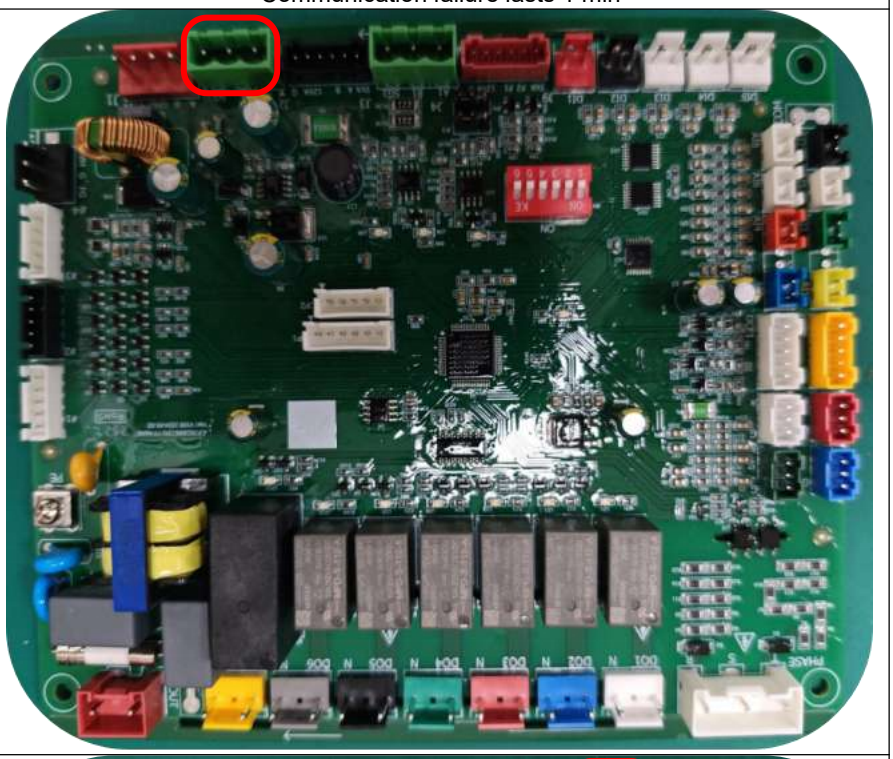
	Expansion Board(J1)	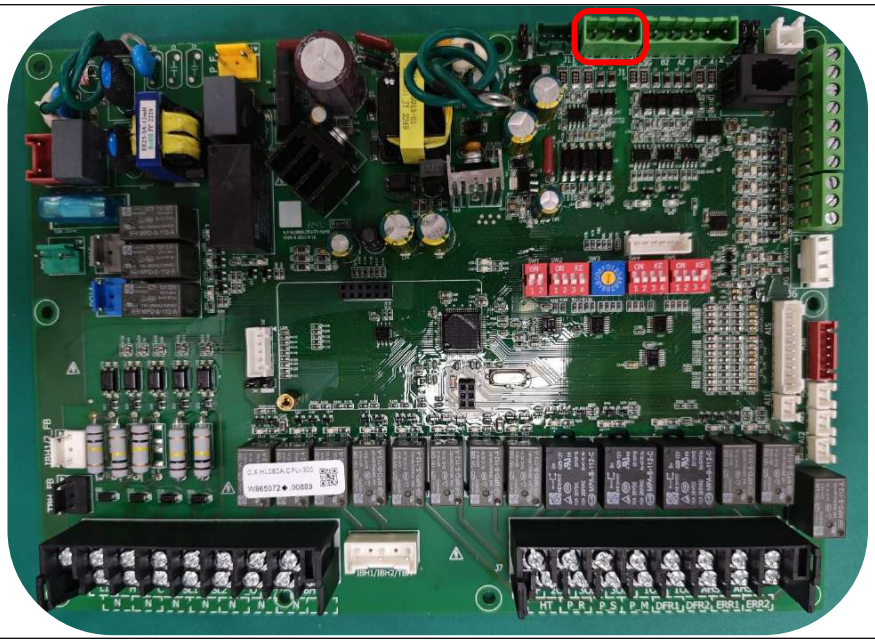

Procedure

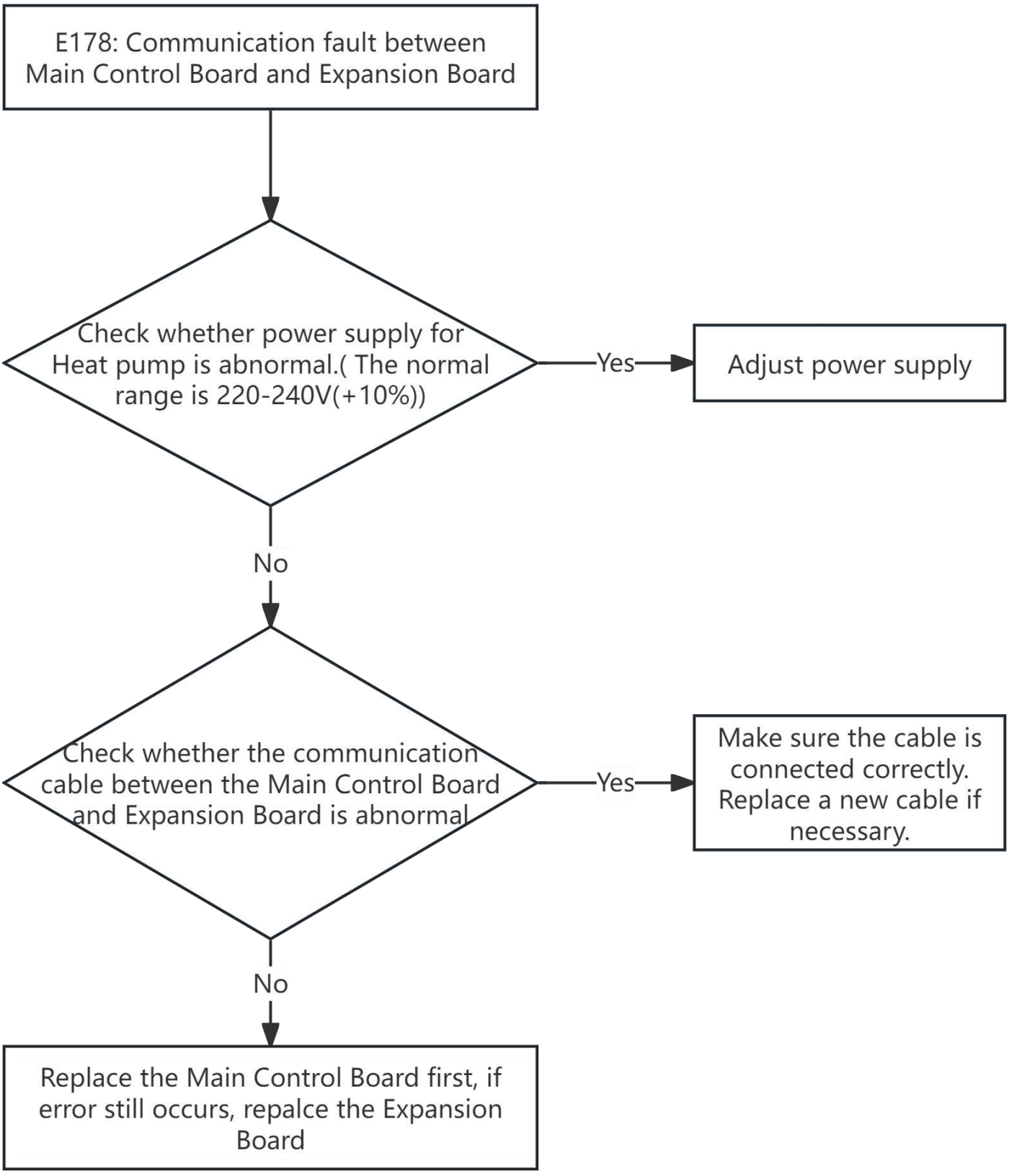
E178: Communication fault between Main Control Board and Expansion Board
Check whether power supply for Heat pump is abnormal.(The normal range is 220-240V(+10%))
Yes
Adjust power supply
No
Check whether the communication cable between the Main Control Board and Expansion Board is abnormal
Yes
Make sure the cable is connected correctly. Replace a new cable if necessary.
No
Replace the Main Control Board first, if error still occurs, repalce the Expansion Board

16.4.9 E103 Troubleshooting

Description

Error code		E103
Description		The protection for overheat exhaust temperature of Compressor
Triggering		The Main Control PCB detected that the compressor exhaust temperature was≥ 110℃
Relative ports and locations	AI4	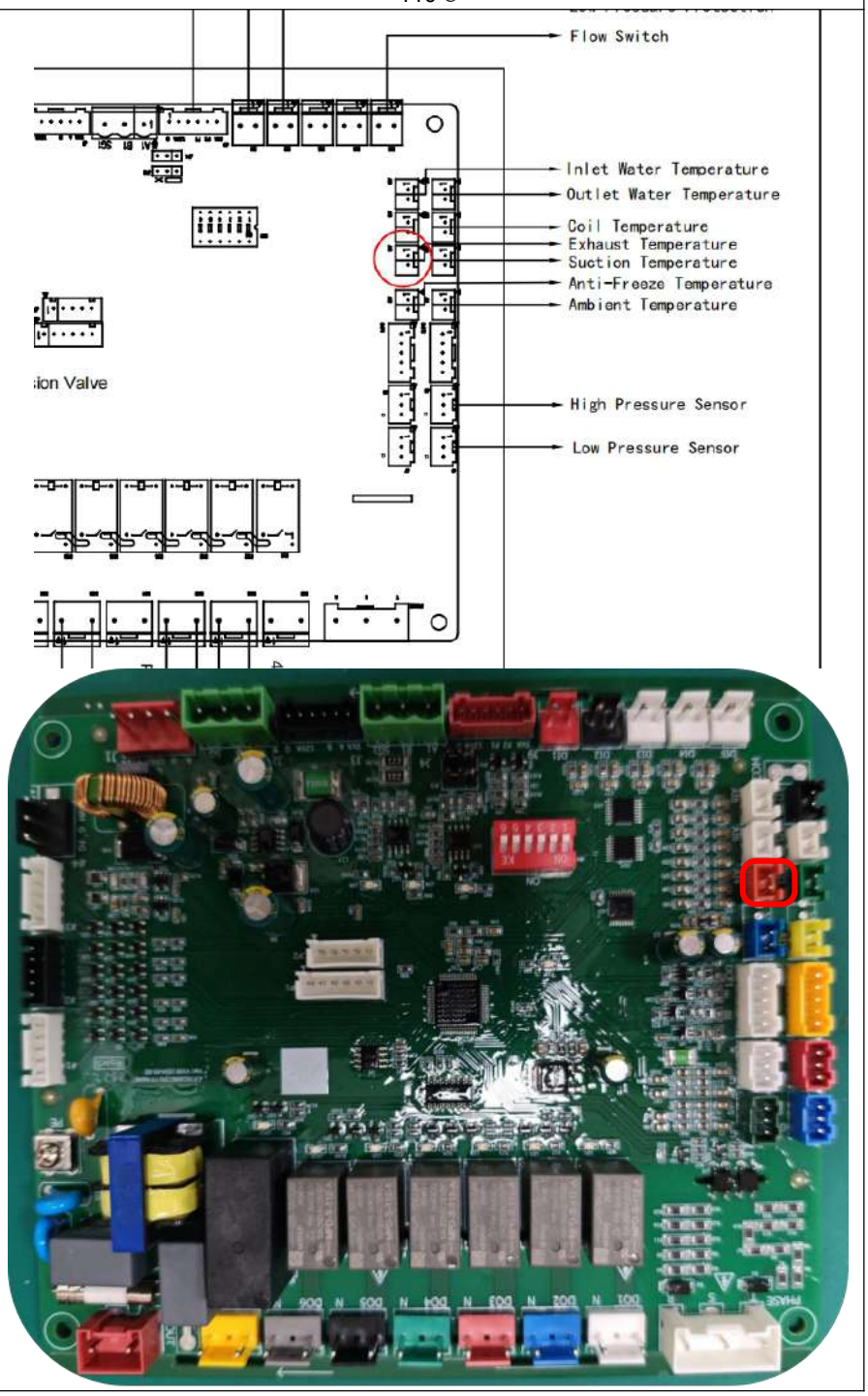

Procedure

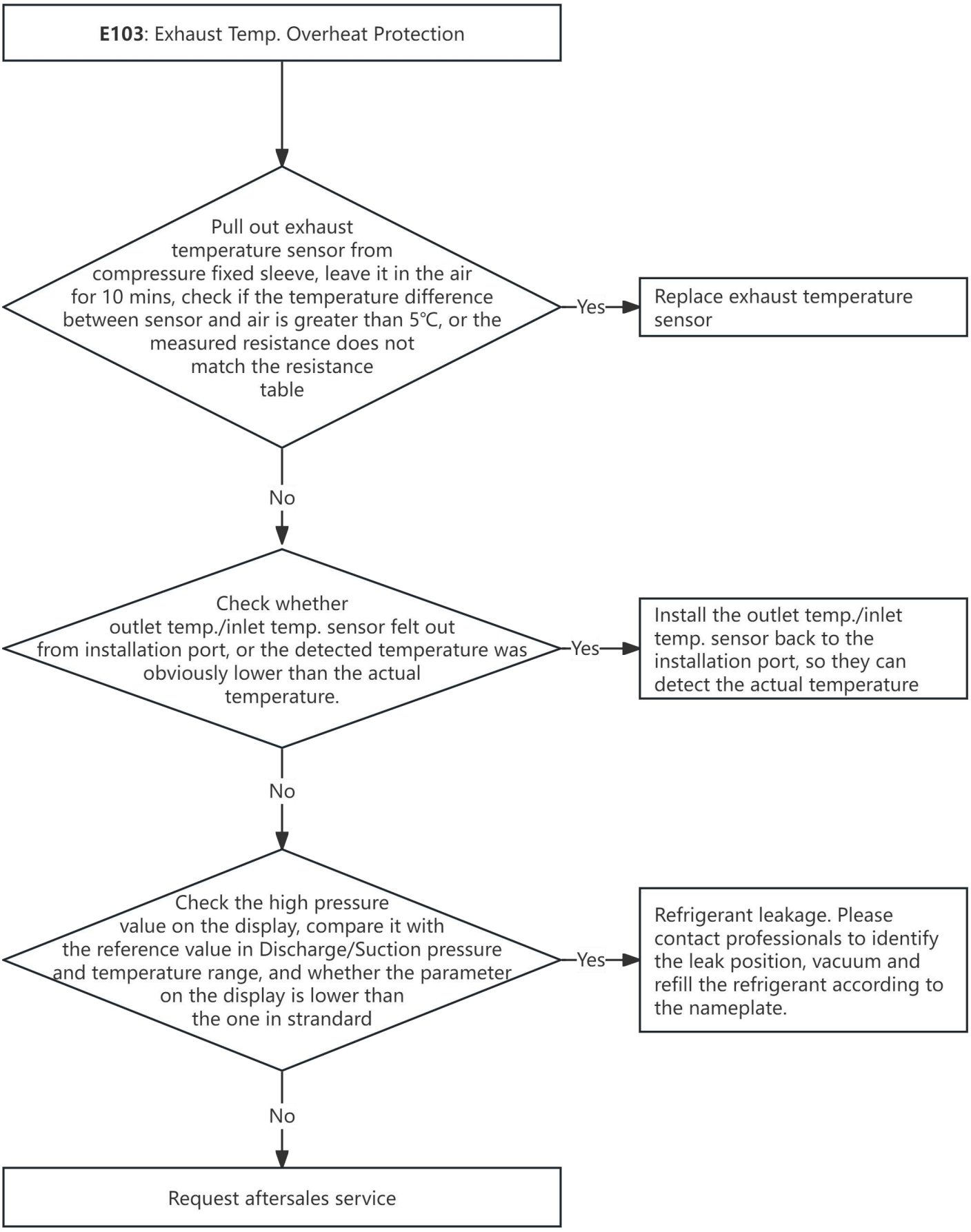
E103: Exhaust Temp. Overheat Protection
Pull out exhaust temperature sensor from compressure fixed sleeve, leave it in the air for 10 mins, check if the temperature difference between sensor and air is greater than 5℃, or the measured resistance does not match the resistance table
Yes
Replace exhaust temperature sensor
No
Check whether outlet temp./inlet temp. sensor felt out from installation port, or the detected temperature was obviously lower than the actual temperature.
Yes
Install the outlet temp./inlet temp. sensor back to the installation port, so they can detect the actual temperature
No
Check the high pressure value on the display, compare it with the reference value in Discharge/Suction pressure and temperature range, and whether the parameter on the display is lower than the one in strandard
Yes
Refrigerant leakage. Please contact professionals to identify the leak position, vacuum and refill the refrigerant according to the nameplate.
No
Request aftersales service

16.4.10 E97 Troubleshooting

Description

Error code		E97
Description		Low pressure protection
Triggering		The Main Control Board detected that the low pressure switch has been triggered.
Relative ports and locations	DI2	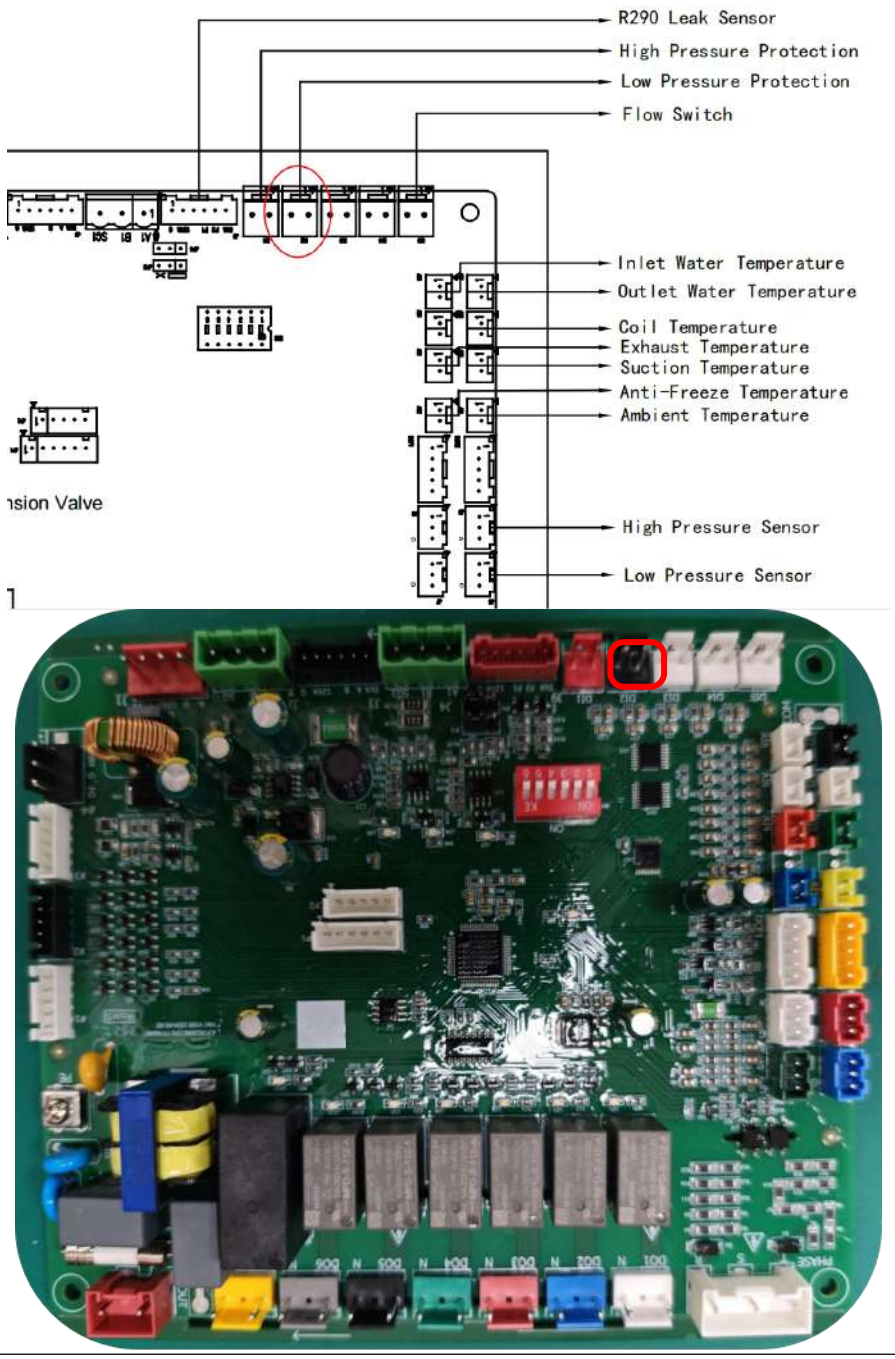

Procedure

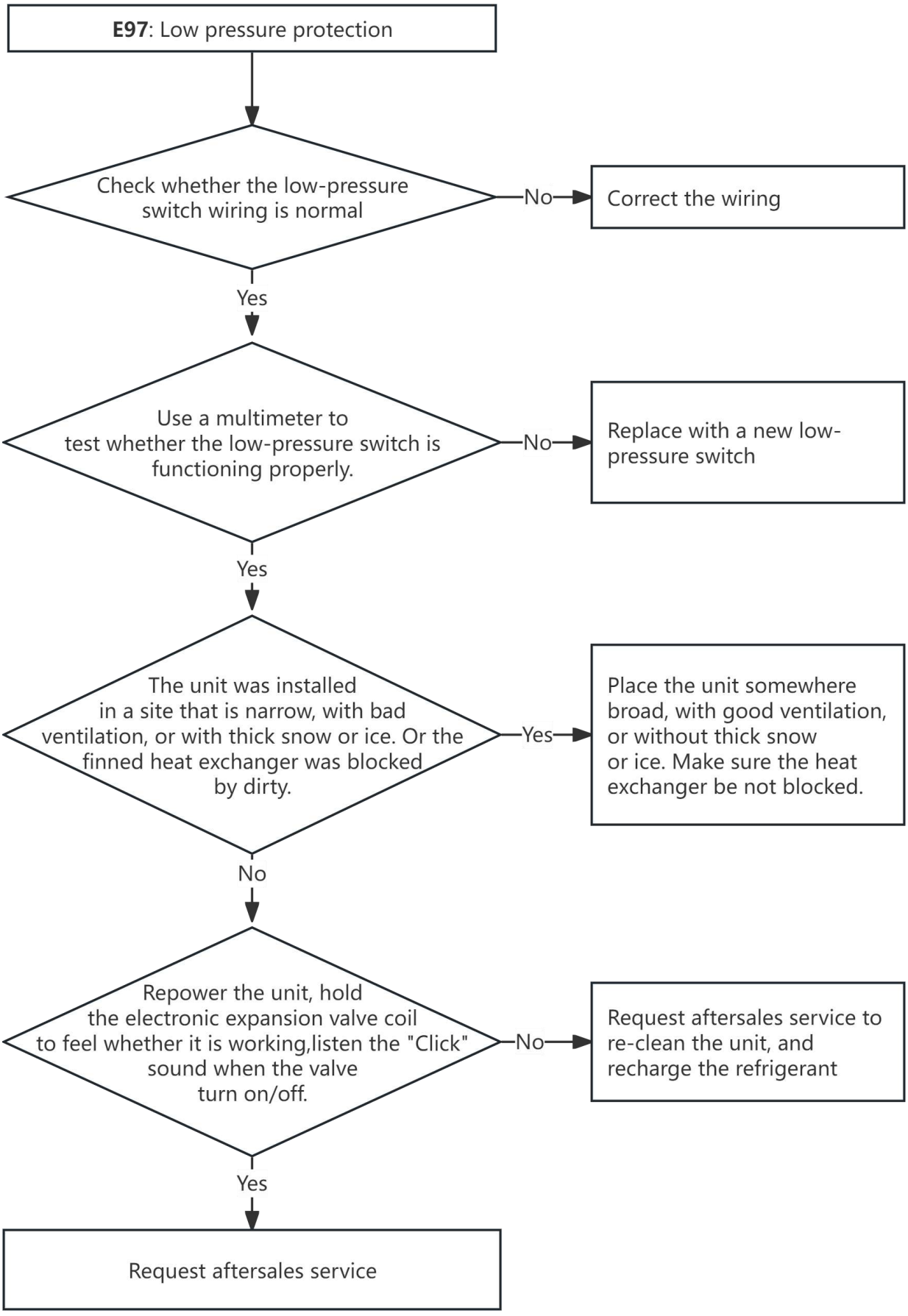
E97: Low pressure protection
Check whether the low-pressure switch wiring is normal
No
Correct the wiring
Yes
Use a multimeter to test whether the low-pressure switch is functioning properly.
No
Replace with a new low-pressure switch
Yes
The unit was installed in a site that is narrow, with bad ventilation, or with thick snow or ice. Or the finned heat exchanger was blocked by dirty.
Yes
Place the unit somewhere broad, with good ventilation, or without thick snow or ice. Make sure the heat exchanger be not blocked.
No
Repower the unit, hold the electronic expansion valve coil to feel whether it is working,listen the "Click" sound when the valve turn on/off.
No
Request aftersales service to re-clean the unit, and recharge the refrigerant
Yes
Request aftersales service

16.4.11 E98 Troubleshooting

Description

Error code		E98
Description		High pressure protection
Triggering		The Main Control Board detected that the high pressure switch has been triggered.
Relative ports and locations	DI1	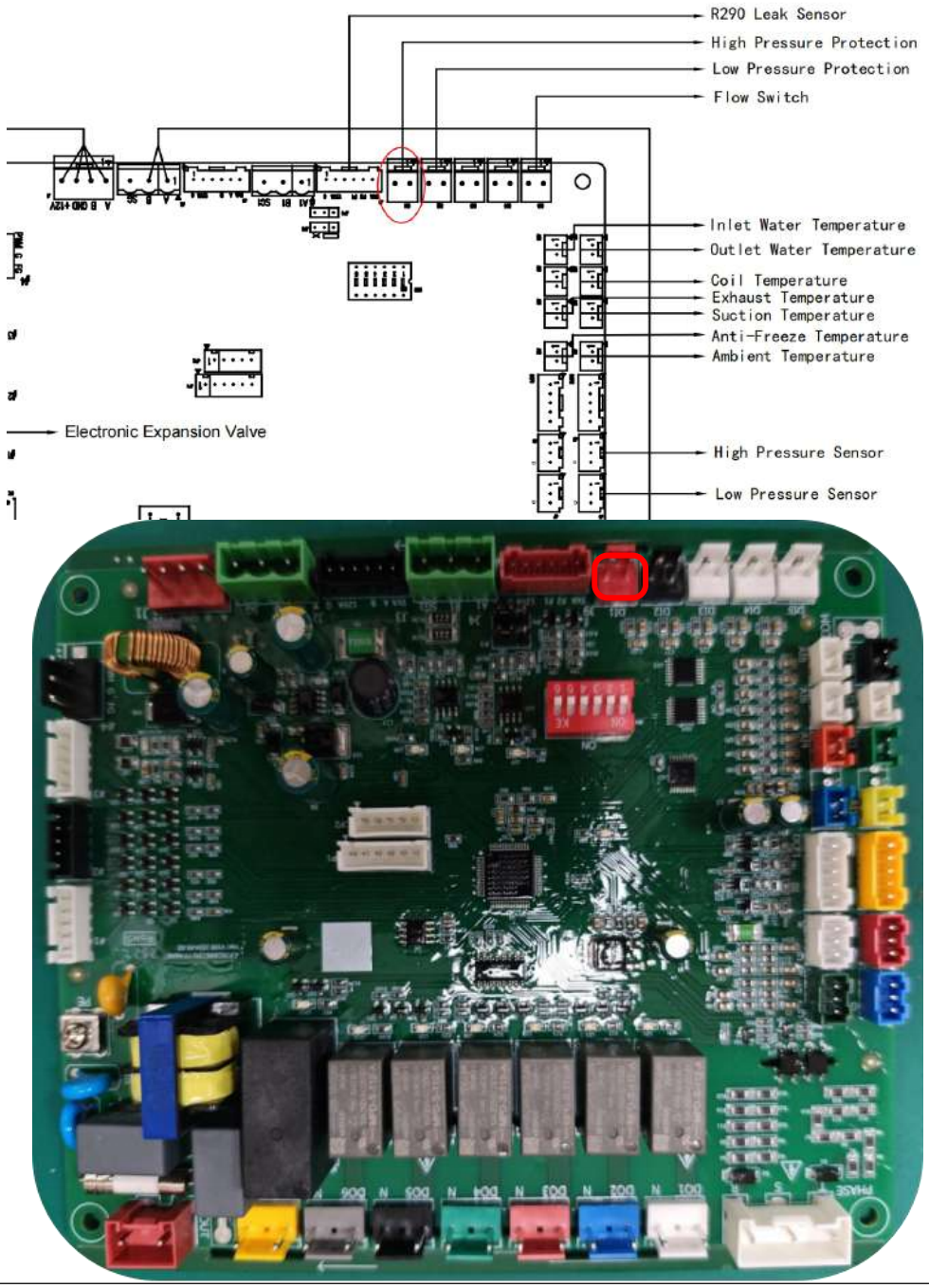

Procedure

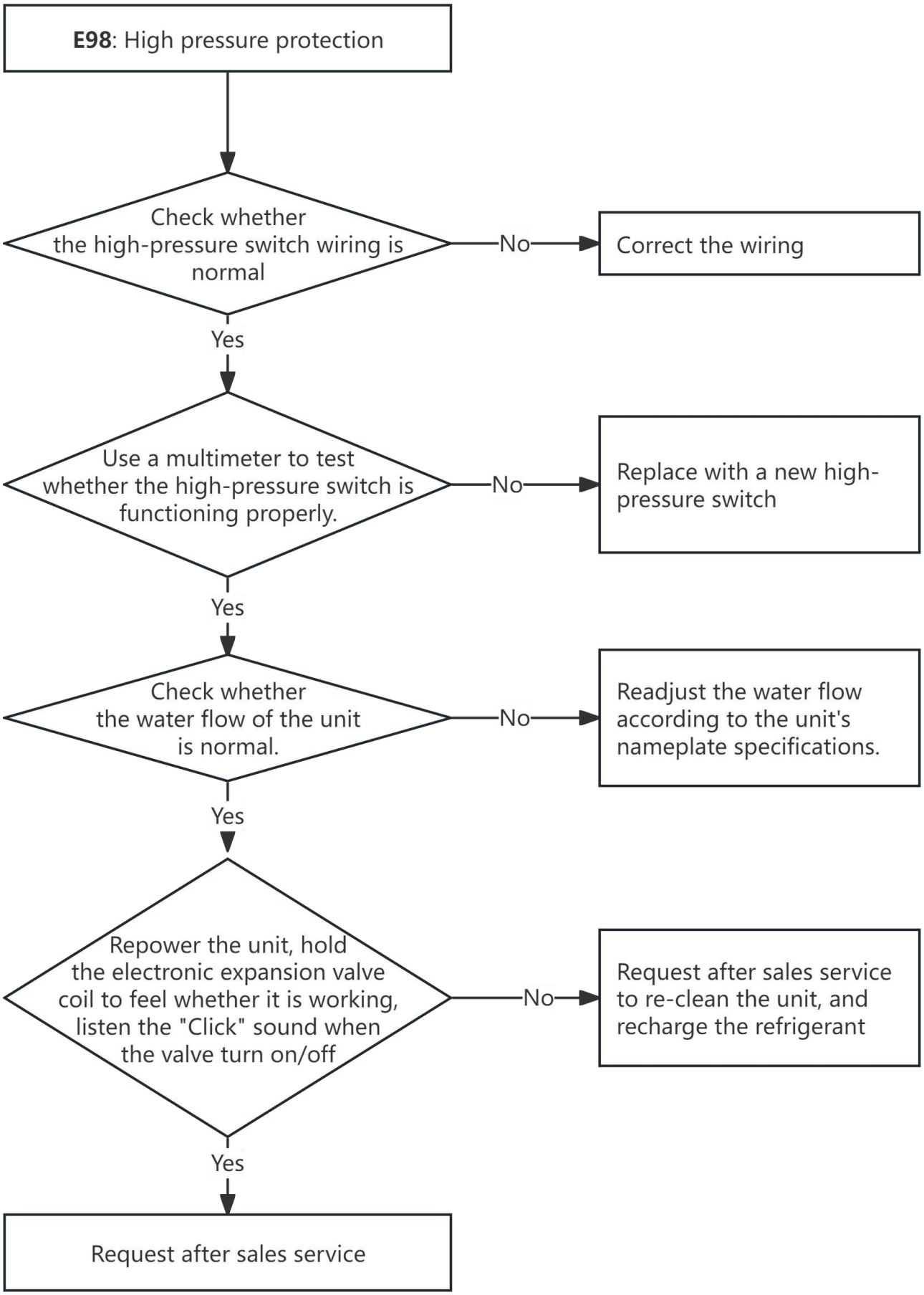
E98: High pressure protection
Check whether the high-pressure switch wiring is normal
No
Correct the wiring
Yes
Use a multimeter to test whether the high-pressure switch is functioning properly.
No
Replace with a new high-pressure switch
Yes
Check whether the water flow of the unit is normal.
No
Readjust the water flow according to the unit's nameplate specifications.
Yes
Repower the unit, hold the electronic expansion valve coil to feel whether it is working, listen the "Click" sound when the valve turn on/off
No
Request after sales service to re-clean the unit, and recharge the refrigerant
Yes
Request after sales service

16.4.12 E115 Troubleshooting

Description

Error code		E115
Description		Low Ambient Temp. Protection
Triggering		In heating/ DHW mode, the error occurs when Ambient Temp.<-25℃ In cooling mode, the error occurs when Ambient Temp.<-7℃
Relative ports and locations	AI1	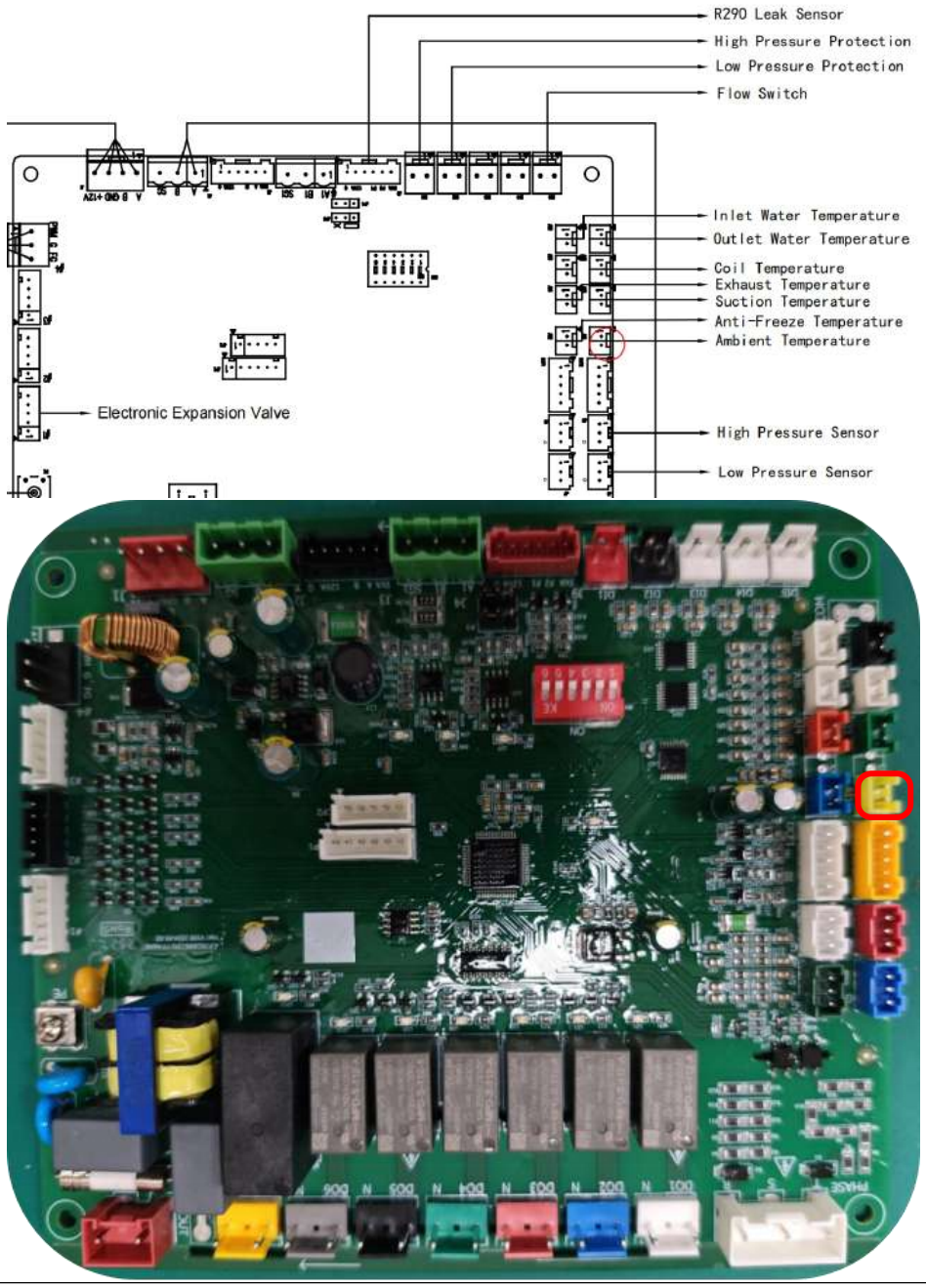

Procedure

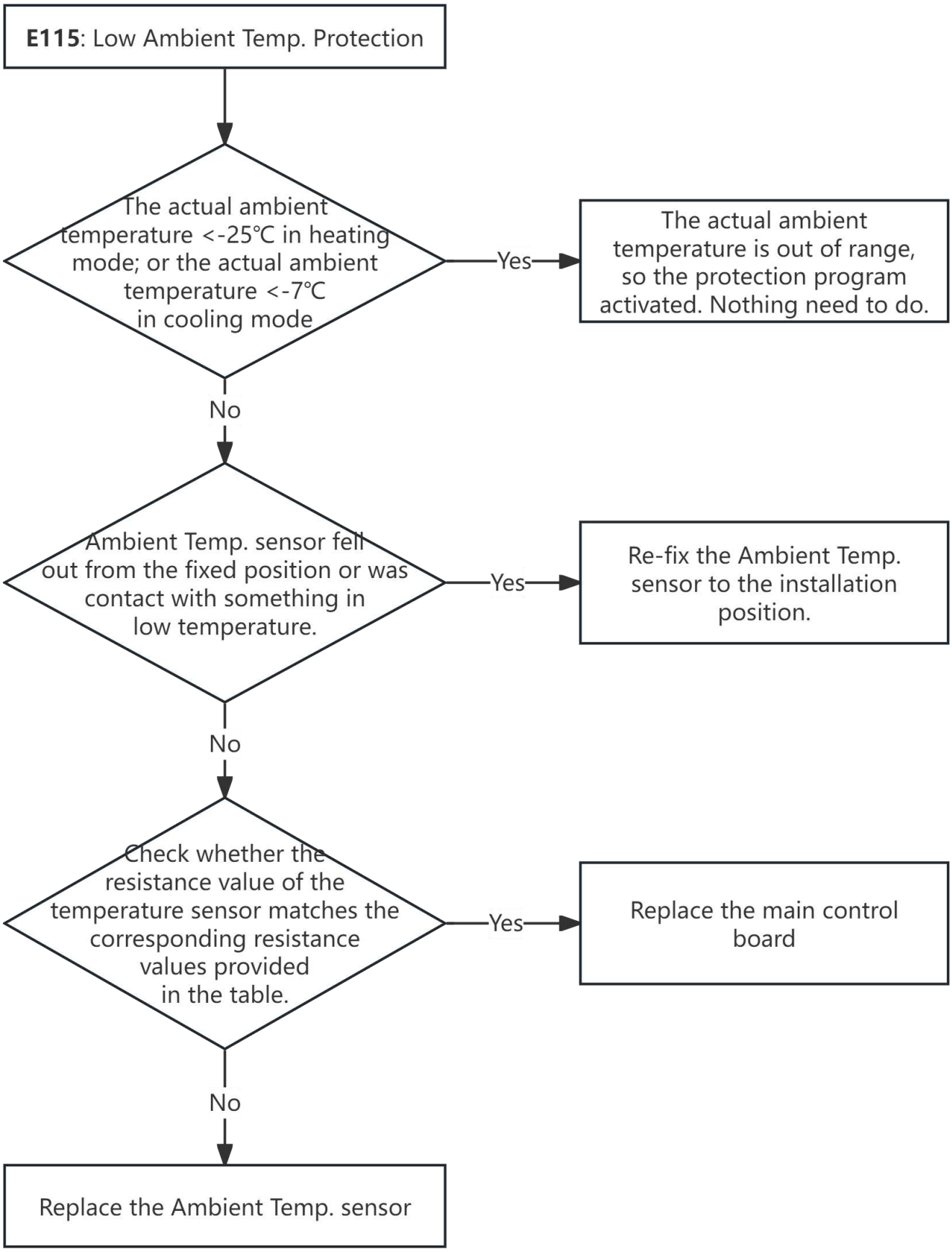
E115: Low Ambient Temp. Protection
The actual ambient temperature <-25℃ in heating mode; or the actual ambient temperature <-7℃ in cooling mode
Yes
The actual ambient temperature is out of range, so the protection program activated. Nothing need to do.
No
Ambient Temp. sensor fell out from the fixed position or was contact with something in low temperature.
Yes
Re-fix the Ambient Temp. sensor to the installation position.
No
Check whether the resistance value of the temperature sensor matches the corresponding resistance values provided in the table.
Yes
Replace the main control board
No
Replace the Ambient Temp. sensor

16.4.13 E118 Troubleshooting

Description

Error code		E118
Description		Fan 1 Speed Abnormal Fault
Triggering		If the heat pump detects that the fan speed remains too low for an period, this fault will be triggered.
Relative ports and locations	FAN1	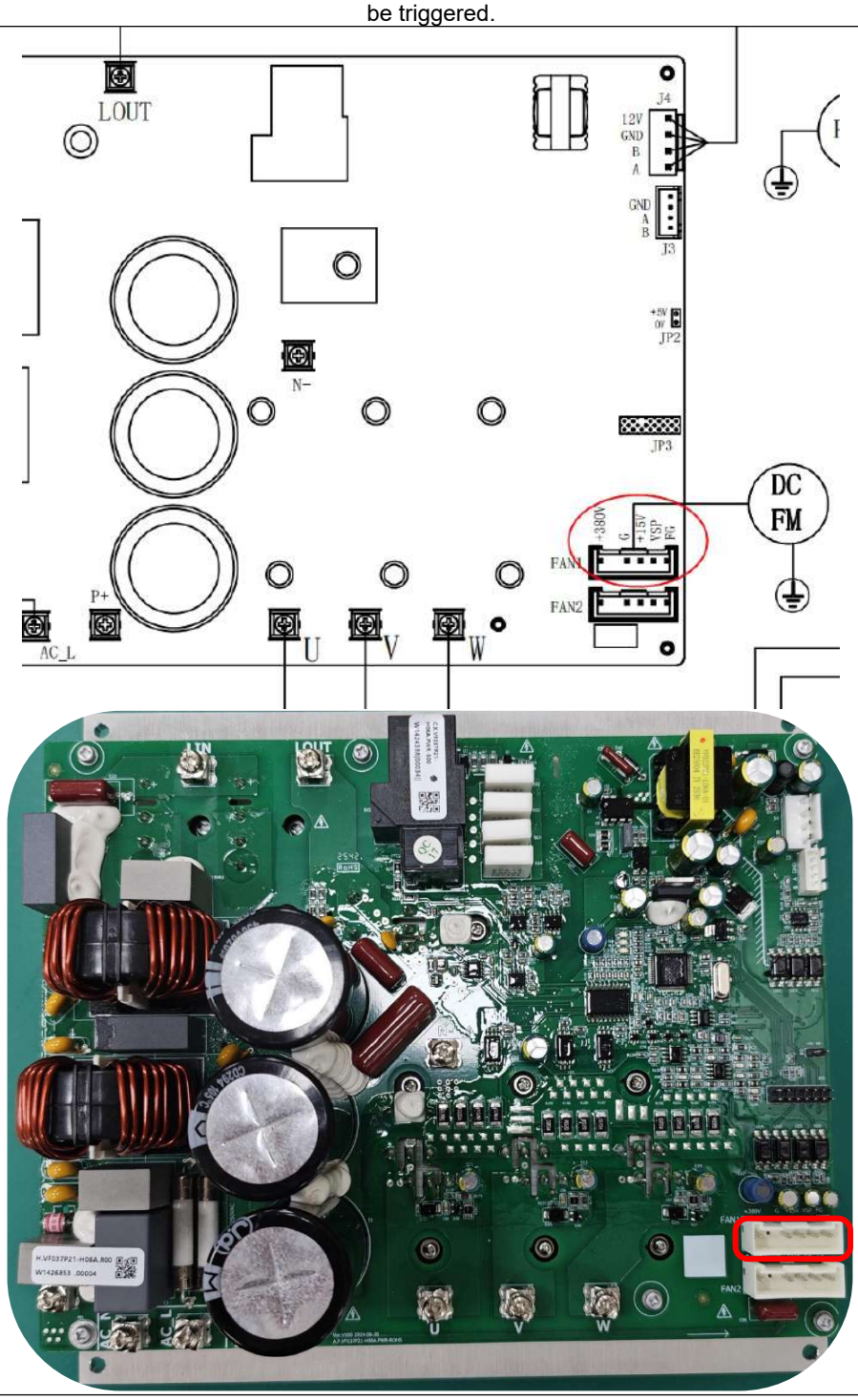

Procedure

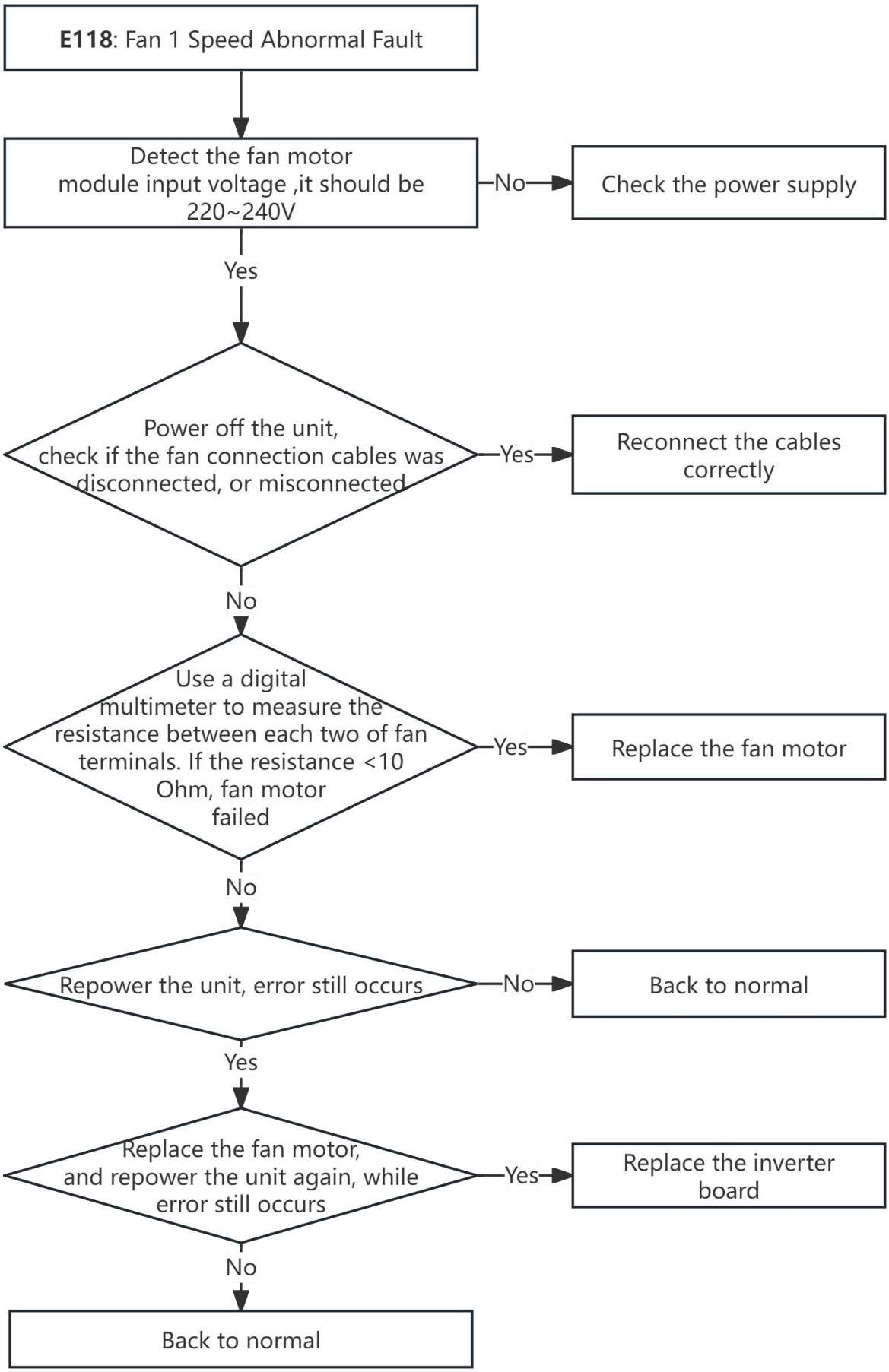
E118: Fan 1 Speed Abnormal Fault
Detect the fan motor module input voltage ,it should be 220~240V
No
Check the power supply
Yes
Power off the unit, check if the fan connection cables was disconnected, or misconnected
Yes
Reconnect the cables correctly
No
Use a digital multimeter to measure the resistance between each two of fan terminals. If the resistance <10 Ohm, fan motor failed
Yes
Replace the fan motor
No
Repower the unit, error still occurs
No
Back to normal
Yes
Replace the fan motor, and repower the unit again, while error still occurs
Yes
Replace the inverter board
No
Back to normal

16.4.14 E164 Troubleshooting

Description

Error code		E164
Description		Auxiliary Electric Heater Overload Protection
Triggering		After enabling the electric heater function, the heat pump will detect the electric heater overload protection port. If it is disconnected, a fault will be reported.
Relative ports and locations	IBH1/2_FB	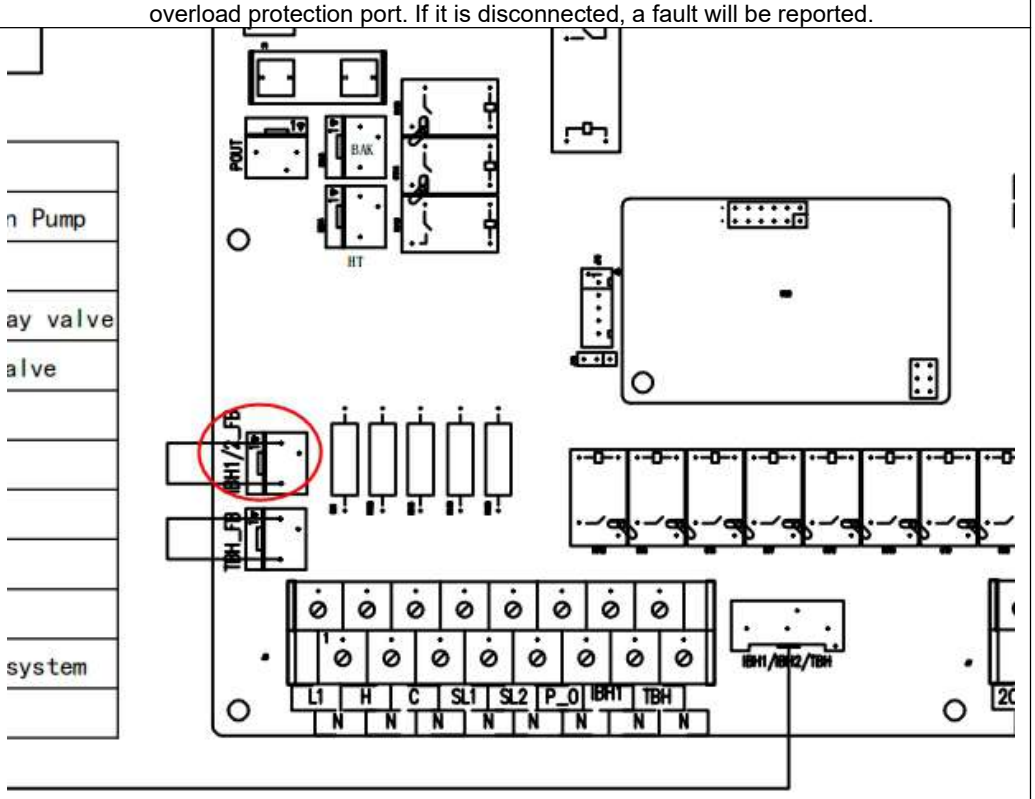 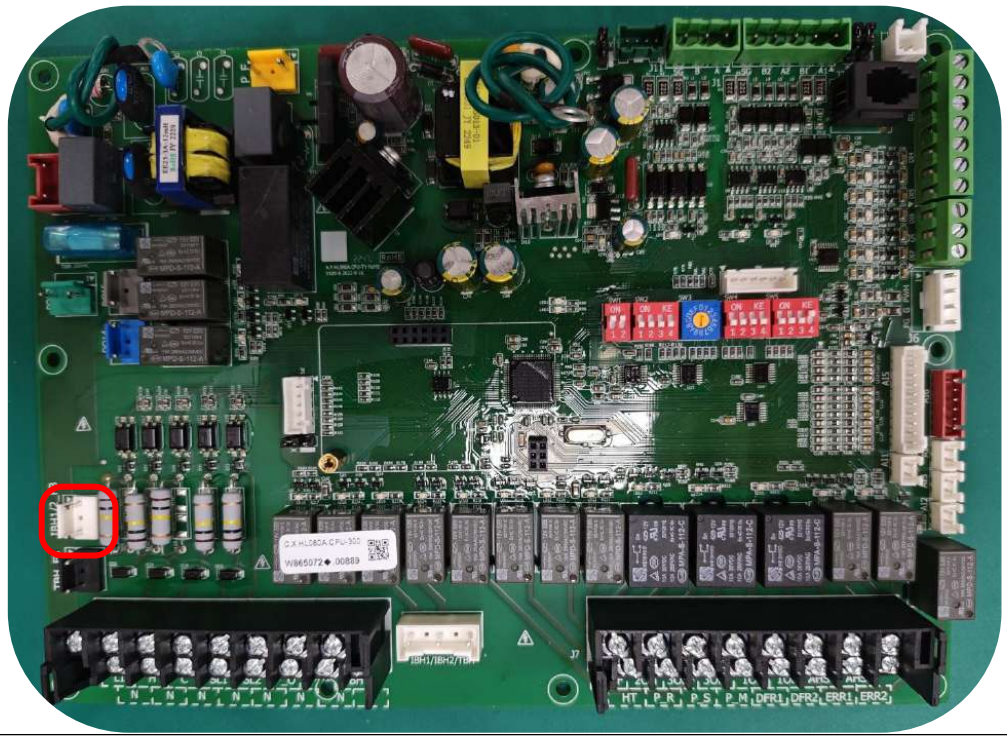

Procedure

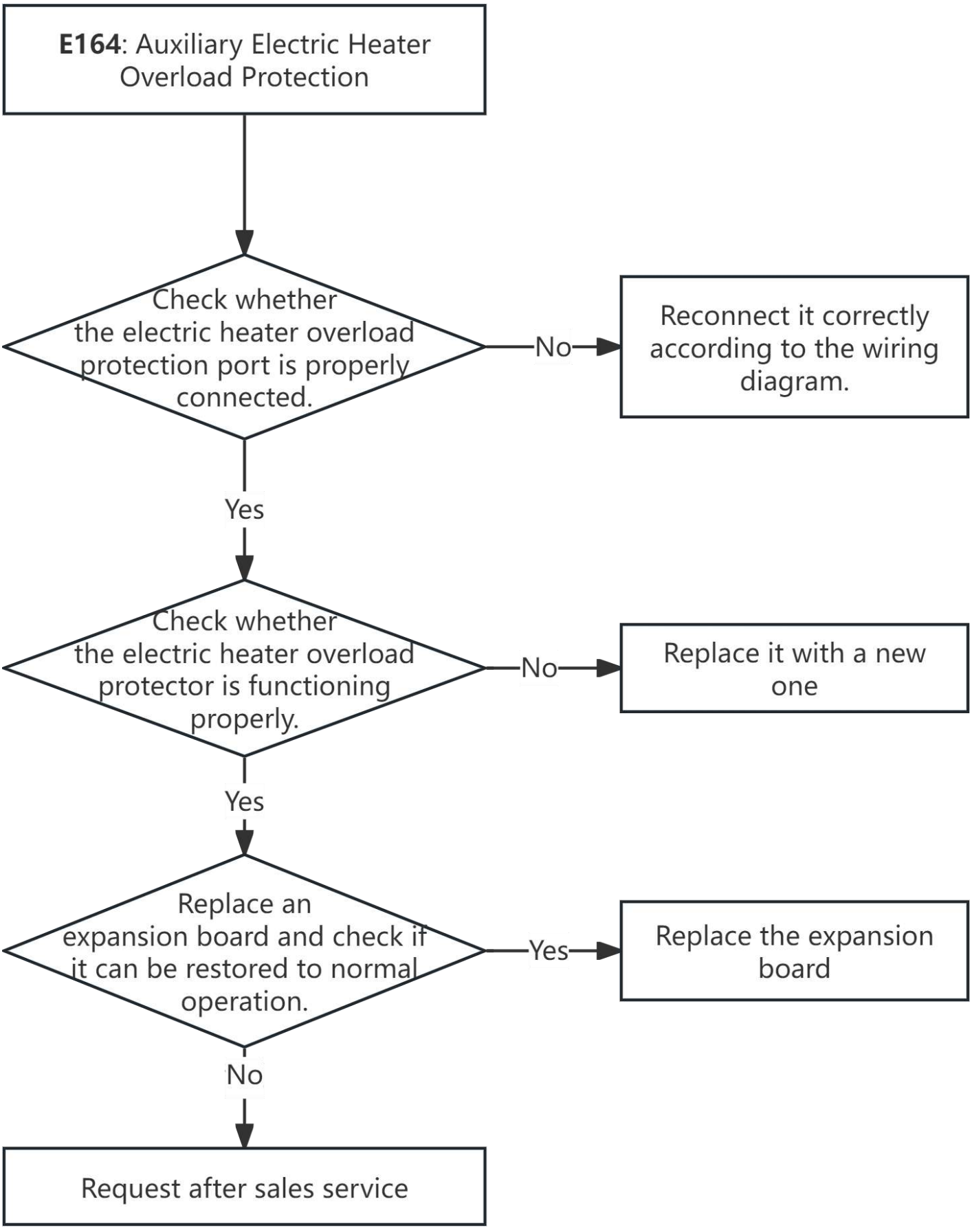
E164: Auxiliary Electric Heater Overload Protection
Check whether the electric heater overload protection port is properly connected.
No
Reconnect it correctly according to the wiring diagram.
Yes
Check whether the electric heater overload protector is functioning properly.
No
Replace it with a new one
Yes
Replace an expansion board and check if it can be restored to normal operation.
Yes
Replace the expansion board
No
Request after sales service

16.4.15 E166 Troubleshooting

Description

Error code		E166
Description		Plate Heat Exchanger Outlet Water Temp. Too Low
Triggering		When the plate heat exchanger outlet water temperature < [Cooling outlet temperature too low], this protection is triggered.
Relative ports and locations	AI7	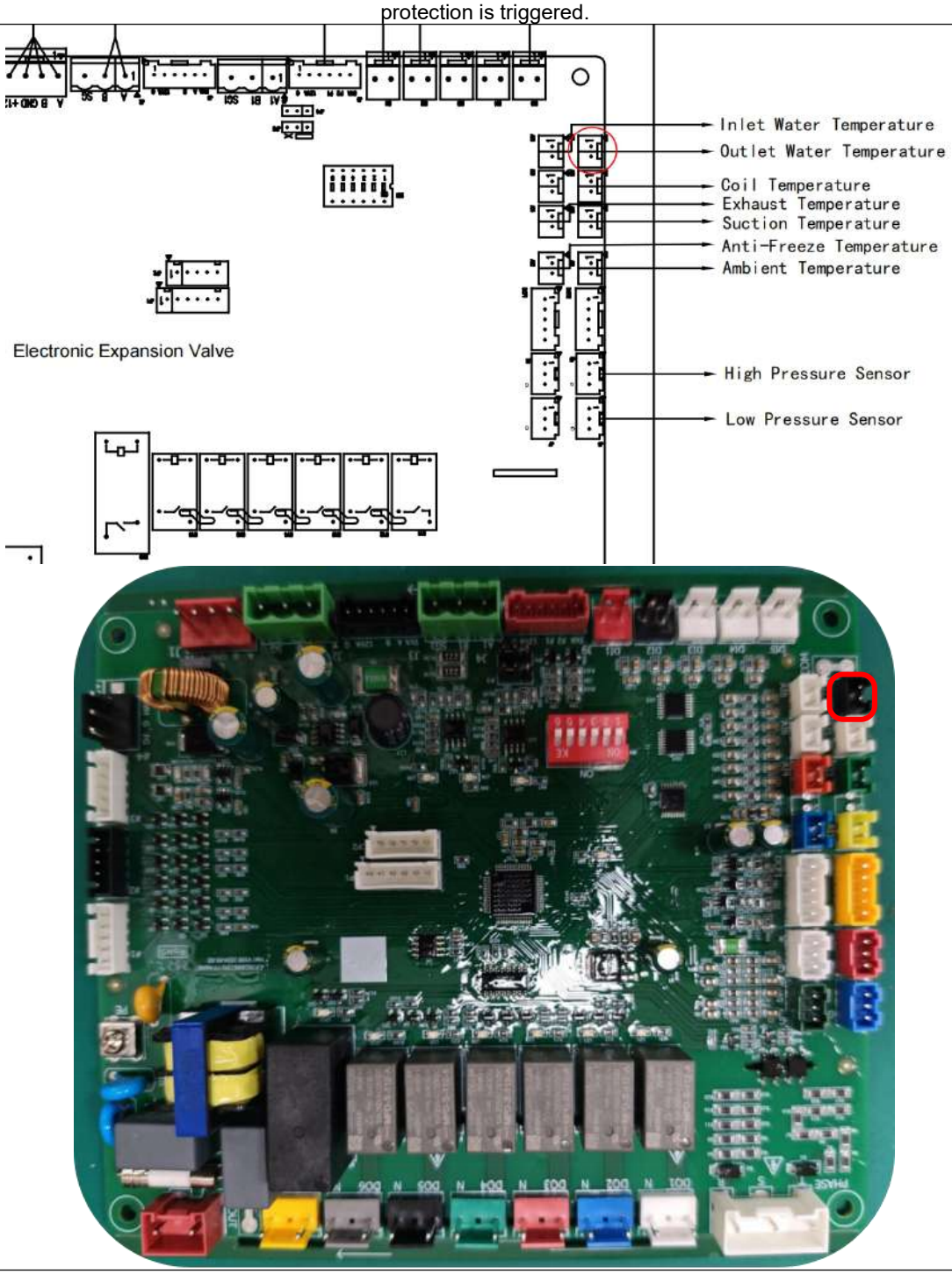

Procedure

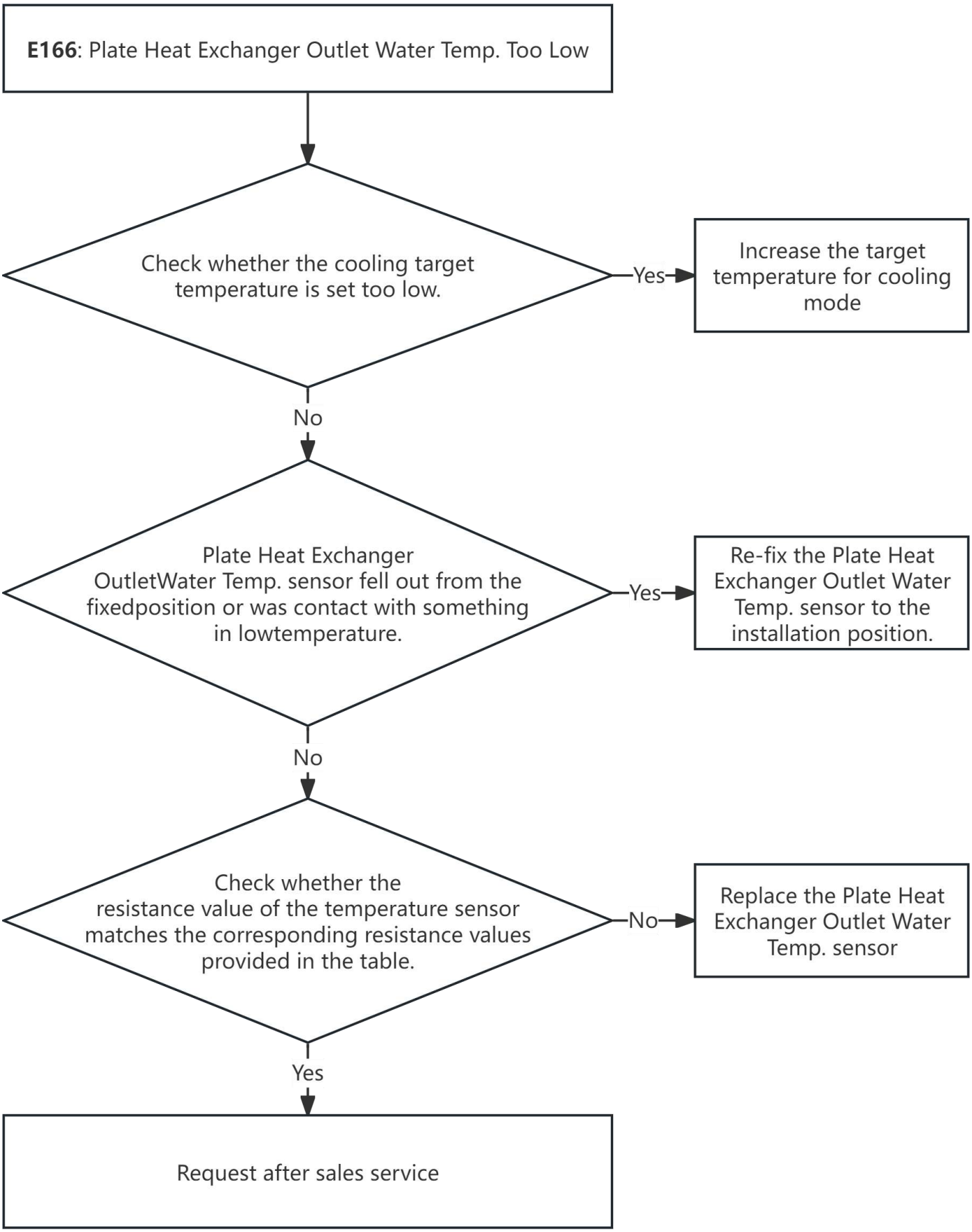
E166: Plate Heat Exchanger Outlet Water Temp. Too Low
Check whether the cooling target temperature is set too low.
Yes
Increase the target temperature for cooling mode
No
Plate Heat Exchanger OutletWater Temp. sensor fell out from the fixedposition or was contact with something in lowtemperature.
Yes
Re-fix the Plate Heat Exchanger Outlet Water Temp. sensor to the installation position.
No
Check whether the resistance value of the temperature sensor matches the corresponding resistance values provided in the table.
No
Replace the Plate Heat Exchanger Outlet Water Temp. sensor
Yes
Request after sales service

16.4.16 E167 Troubleshooting

Description

Error code		E167
Description		Plate Heat Exchanger Outlet Water Temp. Too High
Triggering		When the plate heat exchanger outlet water temperature ≥ [Heating outlet temperature too high], this protection is triggered.
Relative ports and locations	AI7	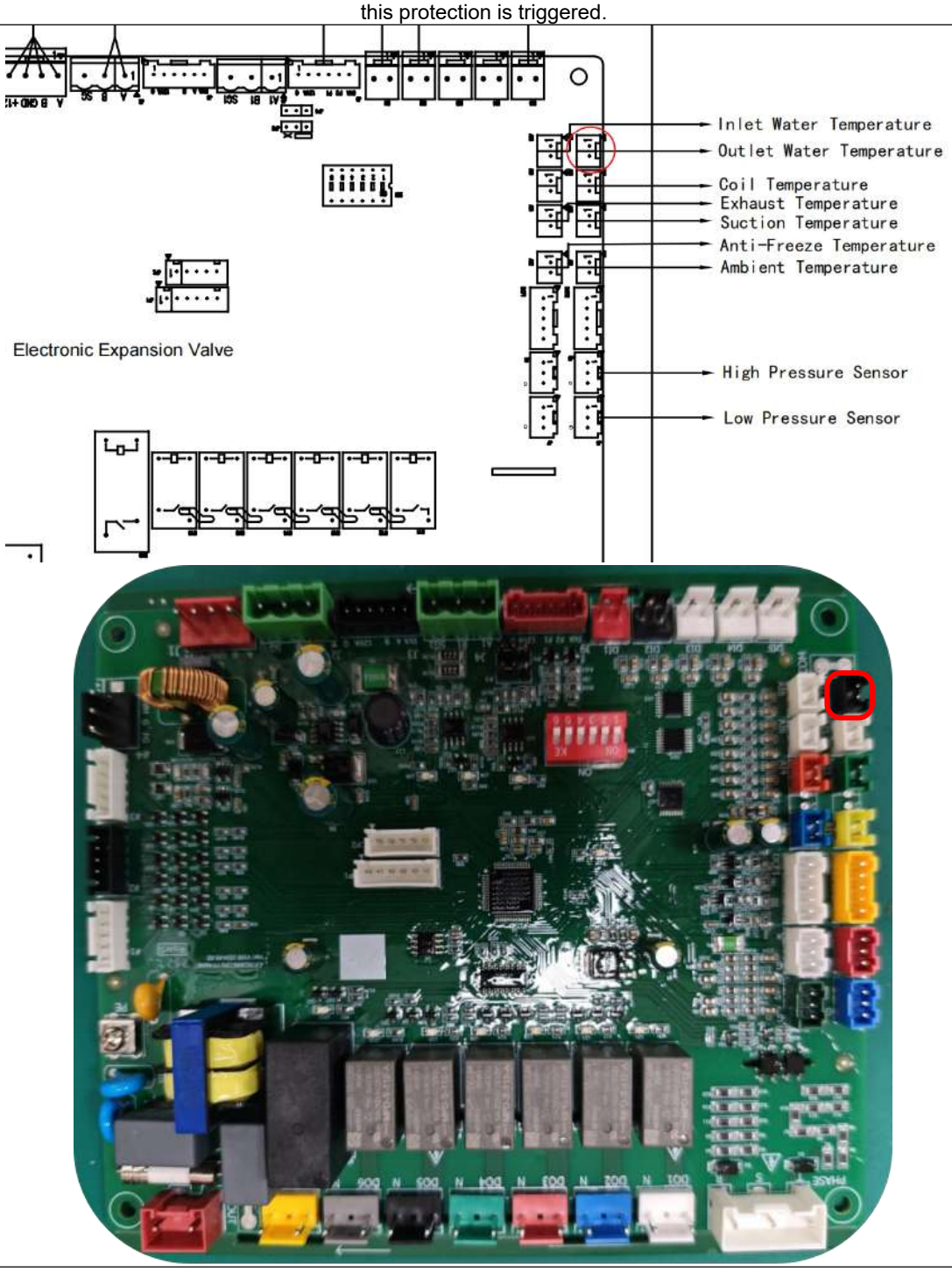

Procedure

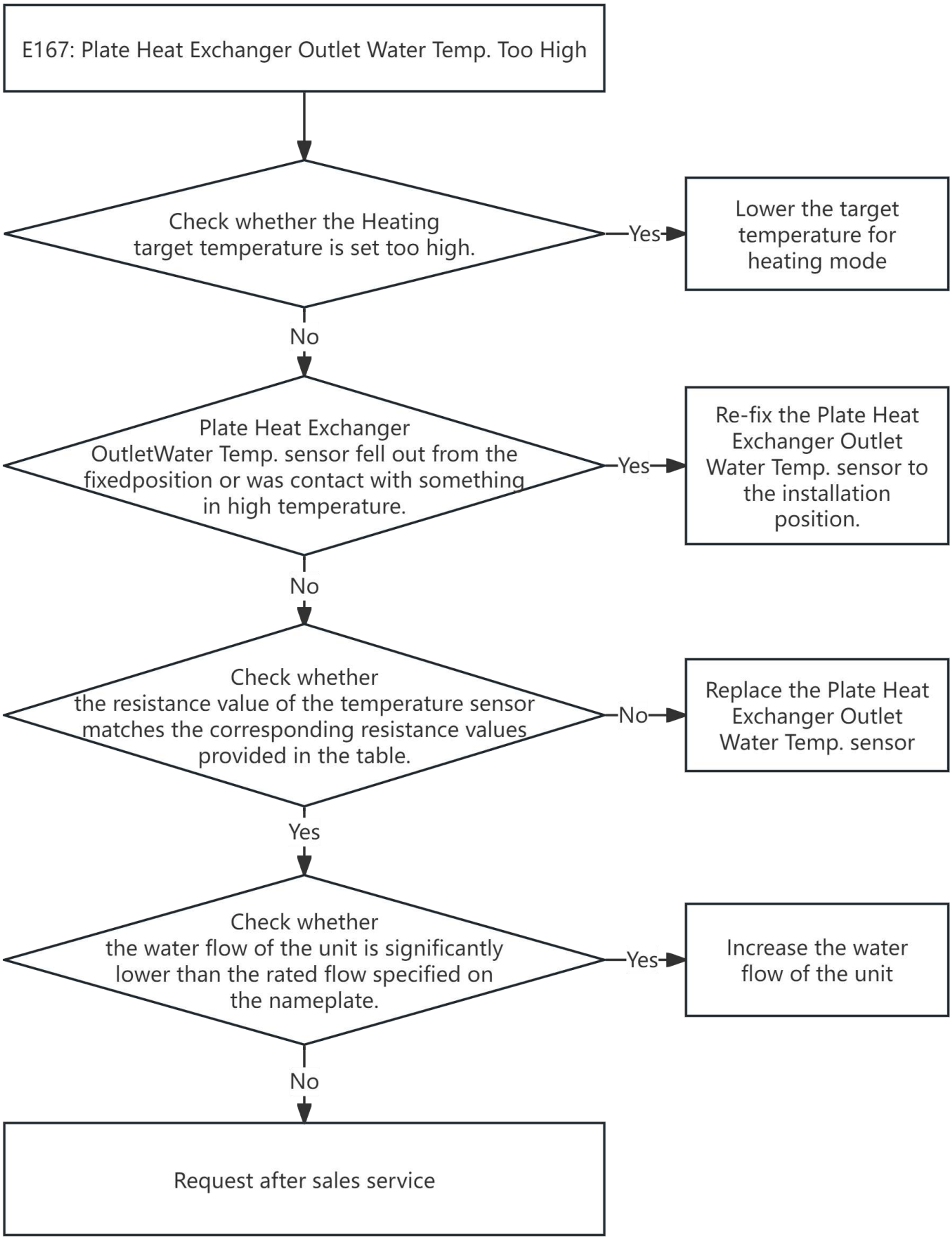
E167: Plate Heat Exchanger Outlet Water Temp. Too High
Check whether the Heating target temperature is set too high.
Yes
Lower the target temperature for heating mode
No
Plate Heat Exchanger OutletWater Temp. sensor fell out from the fixedposition or was contact with something in high temperature.
Yes
Re-fix the Plate Heat Exchanger Outlet Water Temp. sensor to the installation position.
No
Check whether the resistance value of the temperature sensor matches the corresponding resistance values provided in the table.
No
Replace the Plate Heat Exchanger Outlet Water Temp. sensor
Yes
Check whether the water flow of the unit is significantly lower than the rated flow specified on the nameplate.
Yes
Increase the water flow of the unit
No
Request after sales service

16.4.17 E10 Troubleshooting

Description

Error code		E10
Description		DHW Heater Overheat Protection
Triggering		After enabling the DHW electric heater function, the heat pump will detect the DHW electric heater overload protection port. If it is disconnected, a fault will be reported.
Relative ports and locations	TBH_FB	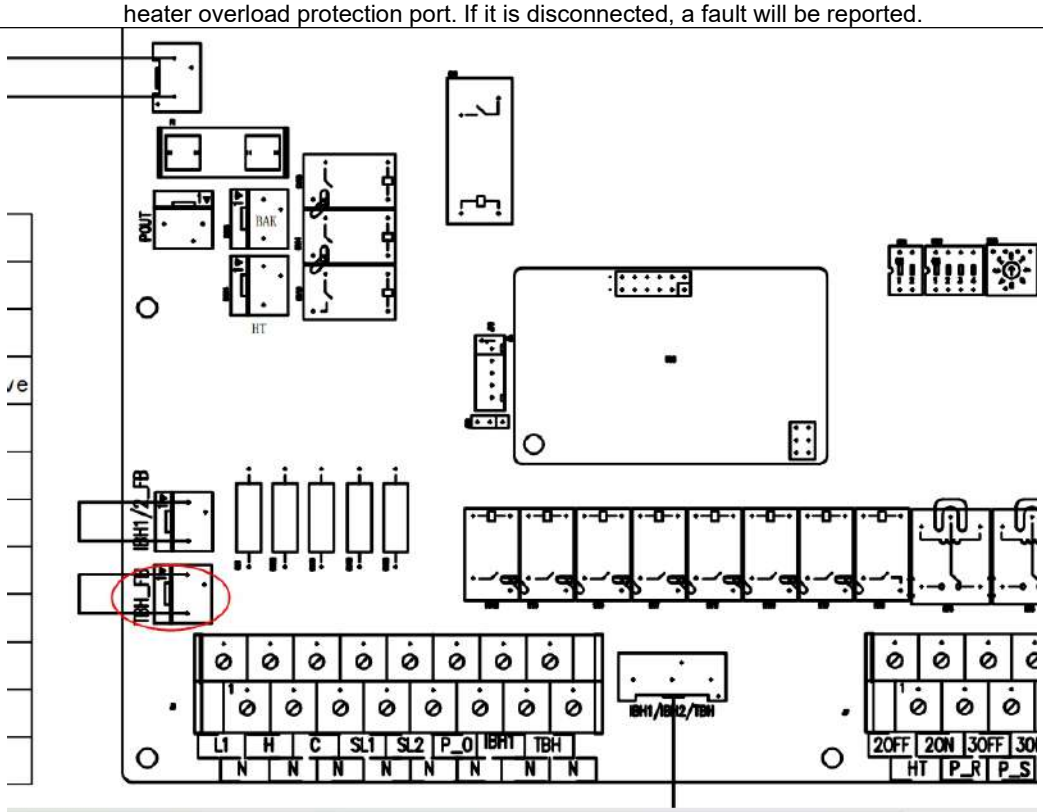 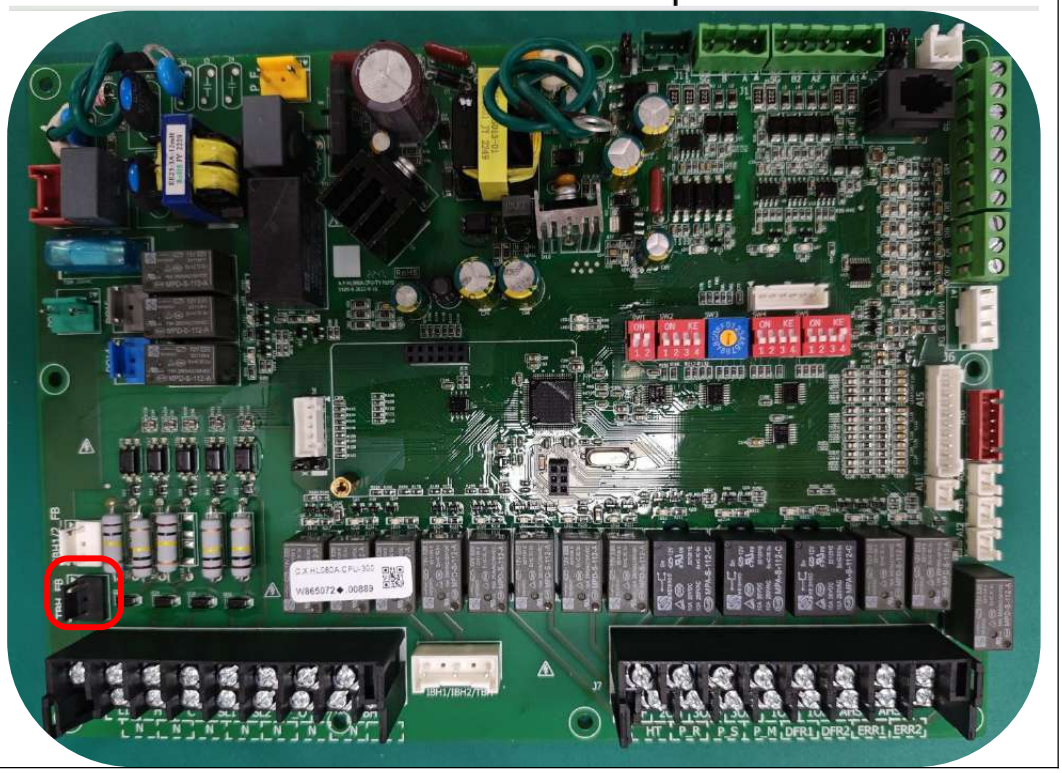

Procedure

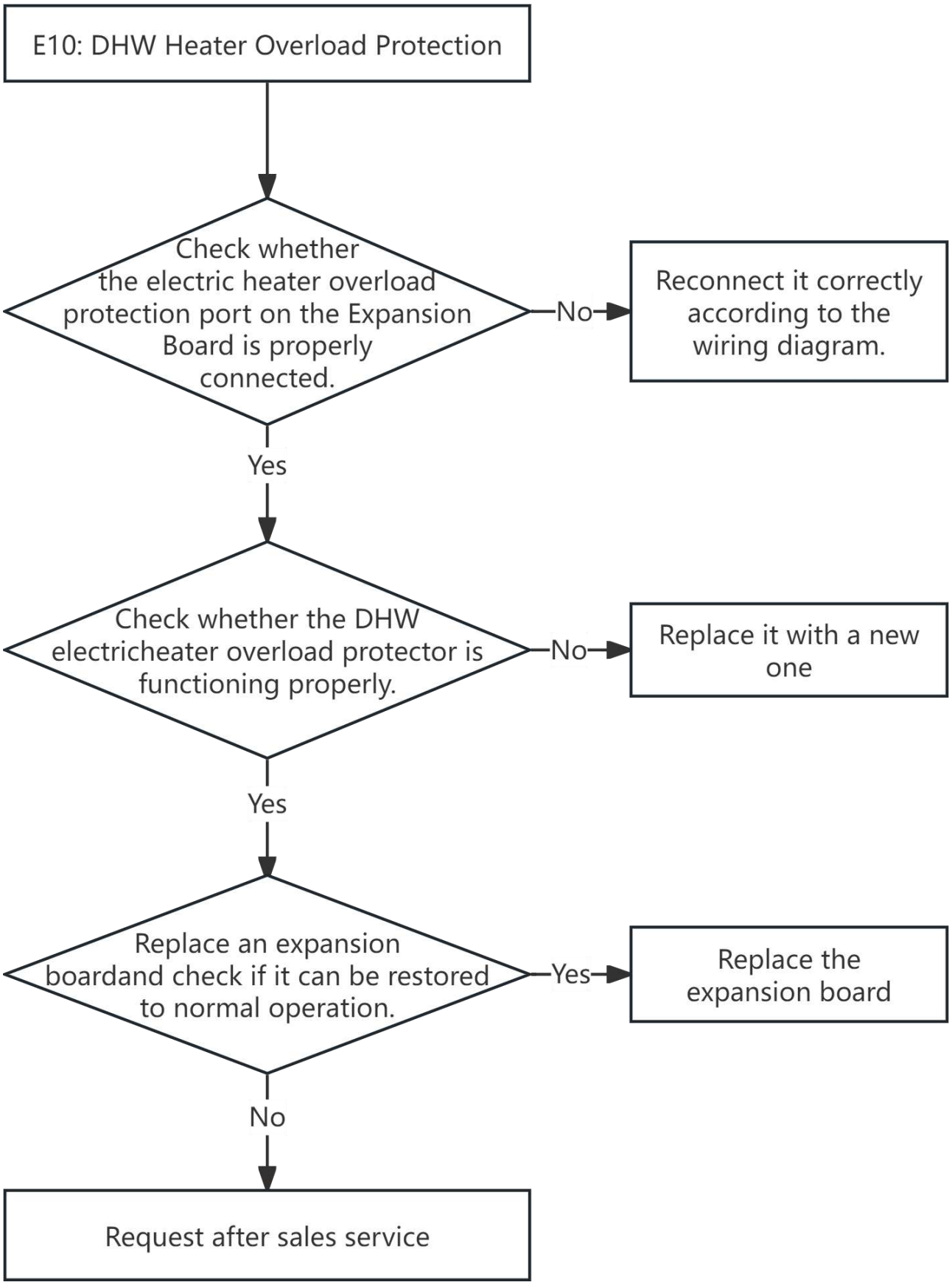
E10: DHW Heater Overload Protection
Check whether the electric heater overload protection port on the Expansion Board is properly connected.
No
Reconnect it correctly according to the wiring diagram.
Yes
Check whether the DHW electricheater overload protector is functioning properly.
No
Replace it with a new one
Yes
Replace an expansion boardand check if it can be restored to normal operation.
Yes
Replace the expansion board
No
Request after sales service

16.4.18 E169 Troubleshooting

Description

Error code		E169
Description		Water Flow Protection
Triggering		When the flow switch detects insufficient water flow, it will trigger this alarm.
Relative ports and locations	DI5	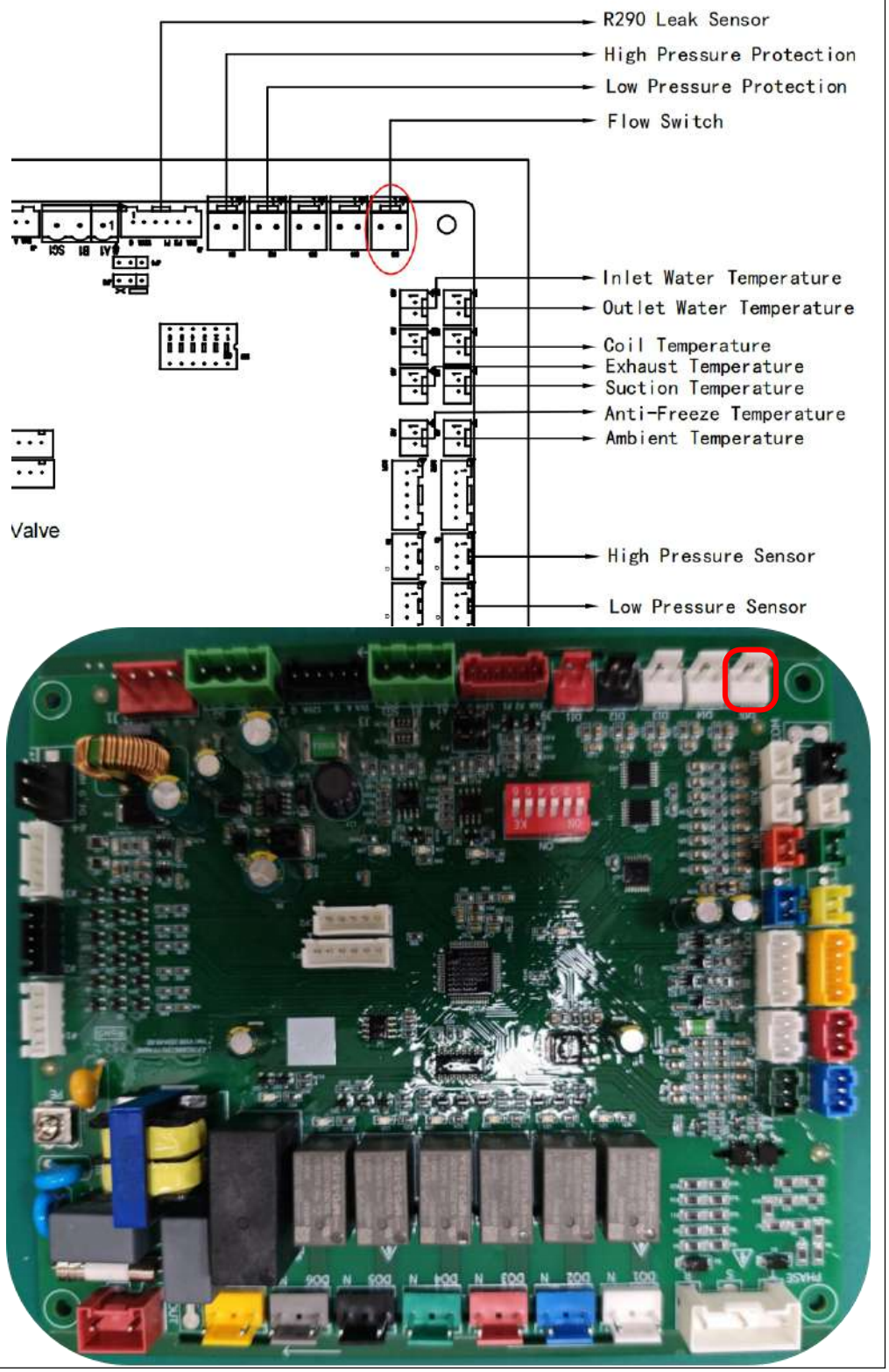

Procedure

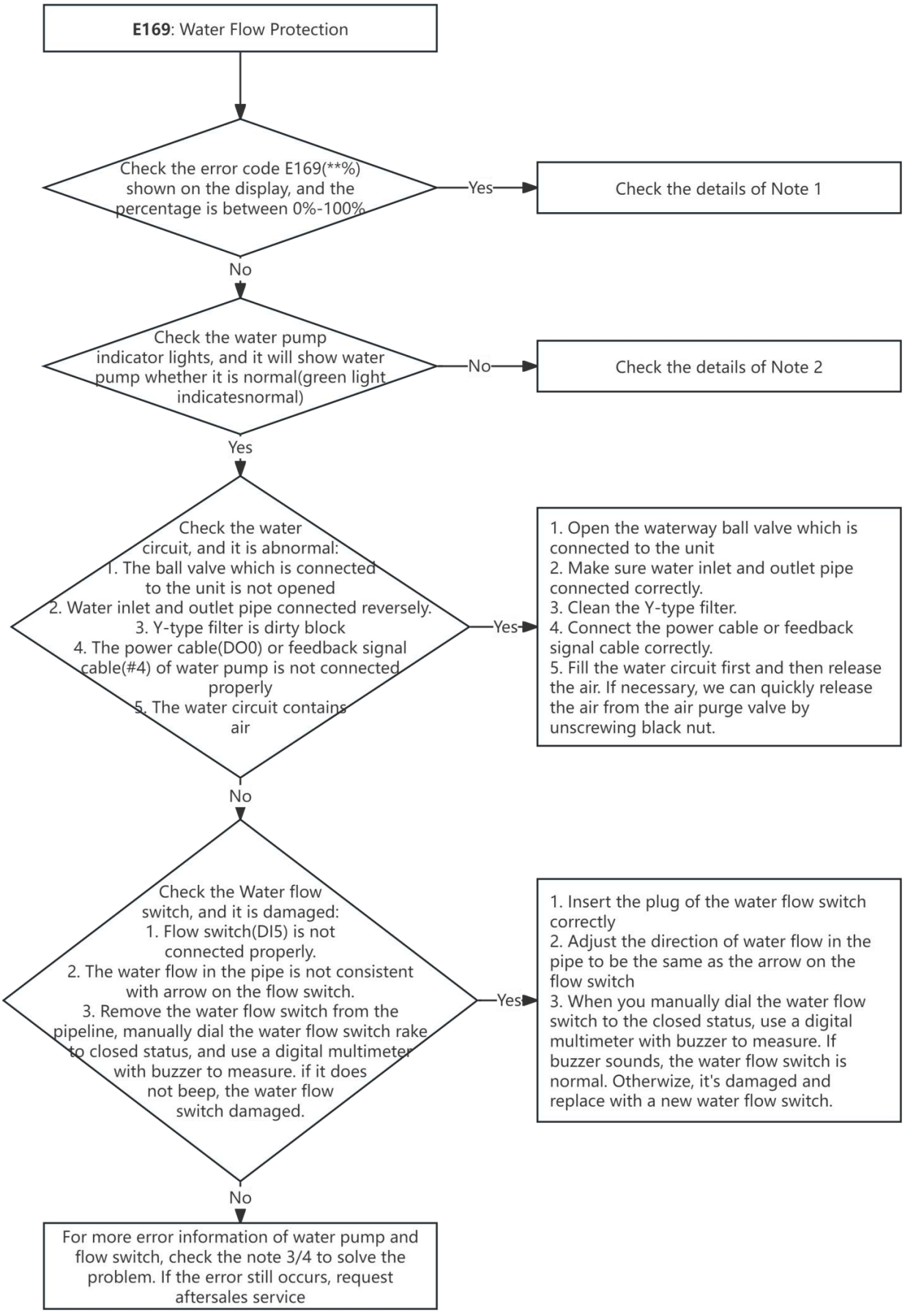
E169: Water Flow Protection
Check the error code E169(**%) shown on the display, and the percentage is between 0%-100%
Yes
Check the details of Note 1
No
Check the water pump indicator lights, and it will show water pump whether it is normal(green light indicatesnormal)
No
Check the details of Note 2
Yes
Check the water circuit, and it is abnormal:
1. The ball valve which is connected to the unit is not opened
2. Water inlet and outlet pipe connected reversely.
3. Y-type filter is dirty block
4. The power cable(DO0) or feedback signal cable(#4) of water pump is not connected properly
5. The water circuit contains air
Yes
1. Open the waterway ball valve which is connected to the unit
2. Make sure water inlet and outlet pipe connected correctly.
3. Clean the Y-type filter.
4. Connect the power cable or feedback signal cable correctly.
5. Fill the water circuit first and then release the air. If necessary, we can quickly release the air from the air purge valve by unscrewing black nut.
No
Check the Water flow switch, and it is damaged:
1. Flow switch(DI5) is not connected properly.
2. The water flow in the pipe is not consistent with arrow on the flow switch.
3. Remove the water flow switch from the pipeline, manually dial the water flow switch rake to closed status, and use a digital multimeter with buzzer to measure. if it does not beep, the water flow switch damaged.
Yes
1. Insert the plug of the water flow switch correctly
2. Adjust the direction of water flow in the pipe to be the same as the arrow on the flow switch
3. When you manually dial the water flow switch to the closed status, use a digital multimeter with buzzer to measure. If buzzer sounds, the water flow switch is normal. Otherwize, it's damaged and replace with a new water flow switch.
No
For more error information of water pump and flow switch, check the note 3/4 to solve the problem. If the error still occurs, request aftersales service

Note 1:

PWMOutput [%]	QT[s]	Information	DT[s]	Priority
95	0	Standby (when PWM input is a standby signal)	0	1
90	30	Warning! The pump is blocked and stops. When the fault disappears, it resumes operation.	12	2
85	5-30	Warning! Input voltage is below ~150V, the pump stops due to electrical error. It restarts when the voltage recovers to ~160V.	1-12	3
80	20	Warning, pump is dry running , pump continues operation	1	5
0-70		0,0 - 4 [m3/h] (ratio 0,057 [m3/h] / % PWM)		6

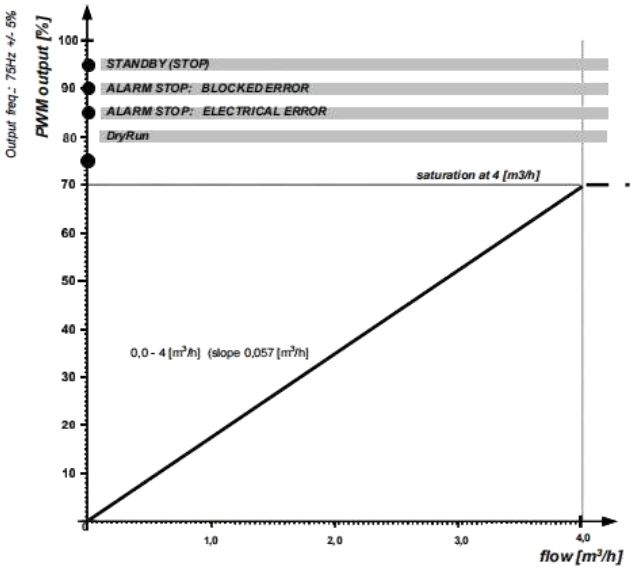

Output Frequency: 75 Hz ± 5 %

QT: Establishment Time, DT: Revocation Time

Note 2– Indicator lights on GRUNDFOS water pump:

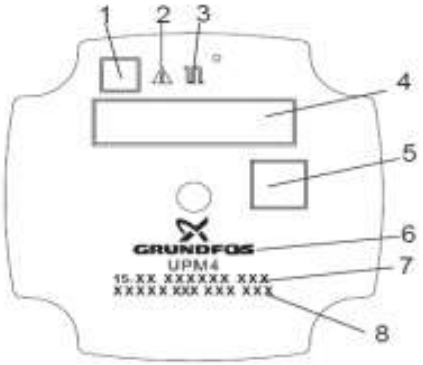

Pos.	Description
1	Quick Guide QR Code
2	Alarm Status On: Blocked / Electrical Error
3	PWM signal off: No signal Blink: PWM communication
5	Data Matrix
7	Type

Note 3:The possible error and solutions of water pump

Possible cause	Solution	Description
Water pump leak	Replace the sealing ring	Error occurs at the first time running
Water inlet and outlet pipe connected reversely	Connect the pipe correctly.	
The power cable (DO0) is not connected properly	Connect the power cable correctly.	
The feedback signal cable (#4) is not connected properly	Connect the feedback signal cable correctly.	
Pump stalling	Remove the water pump, Rotate the impeller manually until it can move freely. And then install it back. (If it's too hard to rotate the impeller manually, replace the water pump)	Error occurs at the first time running or after running for a while
Power supply is abnormal	Check the power supply	
E169 occurs after water pump running for a while	Fill the water circuit first and then release the air.	Error occurs after running for a while
Motor stall, and it can not be rotated manually	Replace water pump	Error occurs at the first time running or after running for a while
Water pump connection is correct, the water pump icon on the display is lit. While no indicator lights on water pump is lit.	Replace water pump	Error occurs at the first time running

Note 4: The possible error and solutions of water flow switch failure

The possible causes of water flow switch failure and solutions		
Possible cause	Solution	Description
The water flow in the pipe is not consistent with arrow on the flow switch.	Adjust the direction of water flow in the pipe to be the same as the arrow on the flow switch	Error occurs at the first time running
Flow switch (DI5) is not connected properly.	Insert the plug of the water flow switch correctly	
External pump starts before internal pump(PUMPI) starts	Start internal pump first, make sure water flow is sufficient for external pump	
Flow switch not installed properly	Reinstall the flow switch correctly	Error occurs at the first time running or after running for a while
Flow switch leak	Replace the sealing ring	
flow switch rake blocked	Clean the obstacles	
flow switch rake damaged	Replace the flow switch	
The flow switch contact can not be completely closed	Replace the flow switch	
The flow switch contact can not be completely open	Replace the flow switch	
The flow switch model did not match	Replace the flow switch	

16.4.19 E174 Troubleshooting

Description

Error code		E174
Description		Plate Heat Exchanger Inlet/Outlet Temp.Large Difference Protection
Triggering		When the inlet-to-outlet temperature difference of the plate heat exchanger exceeds [Excessive Inlet-to-Outlet Temperature Difference], an alarm will be triggered.
Relative ports and locations	AI7&AI8	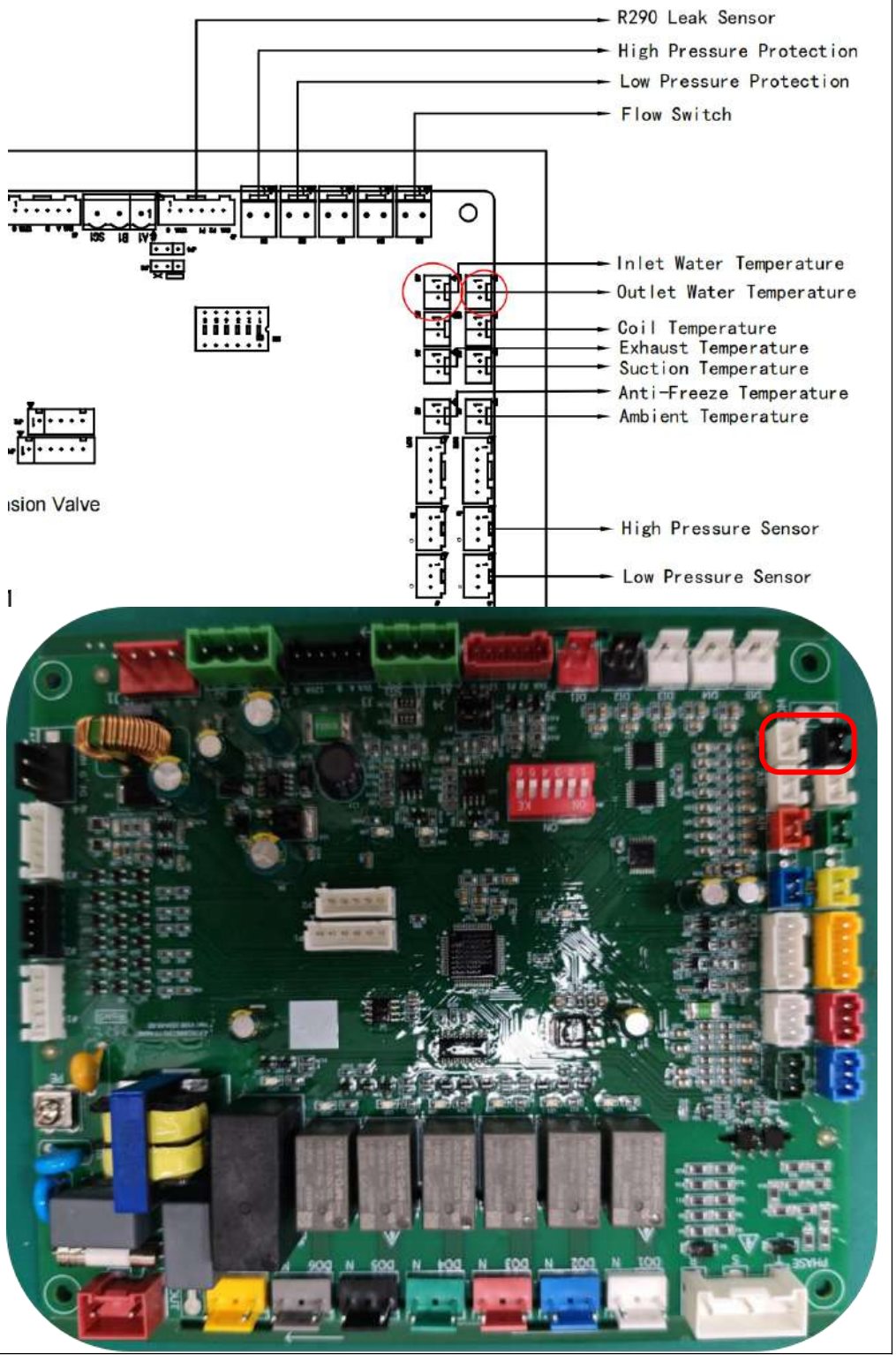

Procedure

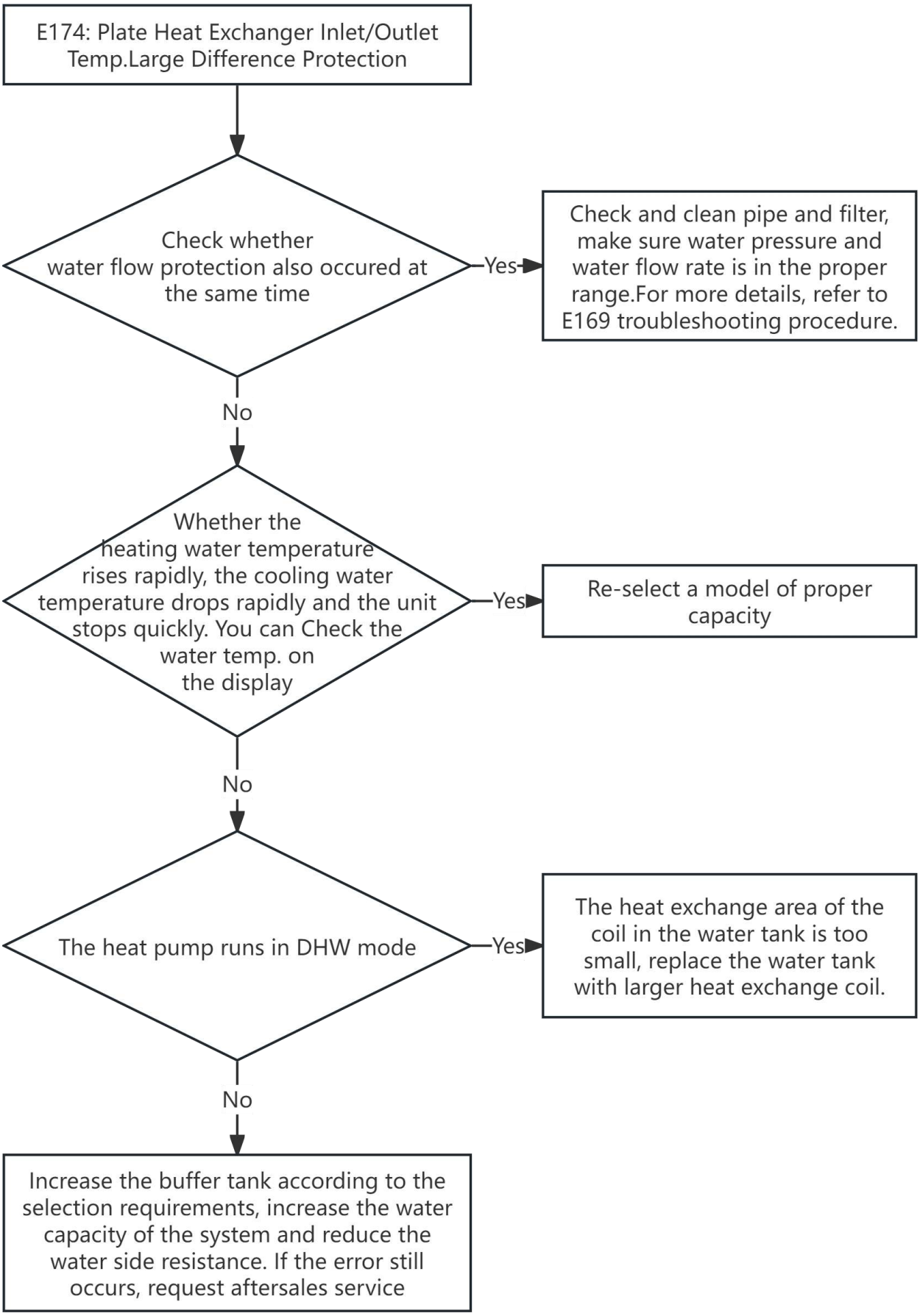
E174: Plate Heat Exchanger Inlet/Outlet Temp.Large Difference Protection
Check whether water flow protection also occured at the same time
Yes
Check and clean pipe and filter, make sure water pressure and water flow rate is in the proper range.For more details, refer to E169 troubleshooting procedure.
No
Whether the heating water temperature rises rapidly, the cooling water temperature drops rapidly and the unit stops quickly. You can Check the water temp. on the display
Yes
Re-select a model of proper capacity
No
The heat pump runs in DHW mode
Yes
The heat exchange area of the coil in the water tank is too small, replace the water tank with larger heat exchange coil.
No
Increase the buffer tank according to the selection requirements, increase the water capacity of the system and reduce the water side resistance. If the error still occurs, request aftersales service

16.4.20 Fault recovery ways

Recovery way	Auto reset (A) Alarms automatically reset after fault elimination. Auto reset has no limit on the number of times.
	Manual reset (M) Alarms can only be manually reset via the controller after fault elimination. Limited auto reset (A/M) faults and auto reset (A) faults can also be manually reset.
	Limited Auto-Reset (A/M) After a fault alarm, when the fault is cleared, a delay of [Fault Reset Time] occurs. If the same fault does not reoccur during this period, the alarm automatically resets. Within the set time [Auto-Reset Allowance Time], automatic reset is permitted twice. Upon the third alarm, the system locks and requires shutdown. After a “Specific Time,” the system automatically resets. “Specific Time”: Starts at 30 minutes and increases by 30 minutes per trigger lockout, up to a maximum of 4 hours. After manual reset, the alarm count resets, and the “Specific Time” restarts from 30 minutes.
E1	A/M
E7	A/M
E12	A
E80	A
E104	M
E105	M
E182	A
E101	M
E102	M
E108	M
E109	M
E161	A
E168	A
E171	A
E83	M
E124	A
E178	A
E103	A/M
E106	A/M
E107	A/M
E115	A
E118	A/M
E164	M
E166	A/M
E167	A/M
E10	M
E169	A/M
E174	A/M

17 Disposal

17.1 General

The unit's components and accessories are not classified as ordinary household waste.
The unit itself, along with compressors, motors, and other components, may only be disposed of by qualified specialists.
This unit contains hydrofluorocarbon, which may only be disposed of by qualified specialists.

17.2 Packaging

- Dispose of the packaging properly.
- Observe all relevant regulations



17.3 Refrigerant Handling

WARNING
1. Given the characteristics of R290 refrigerant, work involving it should only be performed by individuals with specialized expert knowledge in refrigeration and who are competent in handling R290.
2. Charging and discharging operations should be performed on the low-pressure side as much as possible to prevent frostbite caused by the refrigerant.

17.3.1 Removal and evacuation

When accessing the refrigerant circuit for repair or other purposes, conventional procedures should be followed. However, given the flammability involved, it is crucial to adhere to best practices. Operate in accordance with the following steps:
- Remove the refrigerant;
- Purge the circuit with inert gas;
- Evacuate the circuit;
- Purge the circuit again with inert gas;
- Open the circuit via cutting or brazing.

The charged refrigerant must be recovered and stored in appropriate recovery cylinders. The system should be flushed with oxygen-free nitrogen (OFN) to ensure unit safety, and this process may need to be repeated multiple times. Never use compressed air or oxygen.
Flushing is performed by filling the system with OFN until the working pressure is reached, then venting to the atmosphere, followed by evacuating the system to a vacuum. This process must be repeated until no refrigerant remains in the system. After the final OFN charge, the system should be vented down to atmospheric pressure before commencing work. This operation is absolutely critical if brazing work is to be carried out on the piping.

Ensure the outlet of the vacuum pump is kept away from any ignition sources and that sufficient ventilation is provided.

17.3.2 Charging procedures

In addition to conventional charging procedures, the following requirements must be observed:
- When using charging equipment, ensure that different refrigerants do not become contaminated. Hoses or lines should be as short as possible to minimize the amount of refrigerant retained in them.
- Before charging the system with refrigerant, the refrigeration system must be earthed (grounded).
- Upon completion of charging, label the system if it is not already labeled.
- Exercise extreme caution to avoid overfilling the refrigeration system.
- Prior to recharging the system, test it with oxygen-free nitrogen (OFN). After charging is complete but before commissioning, perform a leak test on the system. Conduct a follow-up leak test before leaving the site.

17.3.3 Recovery

When removing refrigerant from a system—whether for maintenance or decommissioning—always follow best practices to ensure safe removal.
When transferring refrigerant into cylinders, use only appropriate refrigerant recovery cylinders. Ensure an adequate number of cylinders are available to hold all the refrigerant. All cylinders used must be designated, labeled for the recovered refrigerant (i.e., specialized cylinders for refrigerant recovery), and equipped with properly functioning pressure relief valves and associated shut-off valves.
Empty recovery cylinders should be evacuated and, if possible, cooled before recovery begins.
The recovery equipment must be in good working order, accompanied by on-site operating instructions, and suitable for recovering

flammable refrigerants. Additionally, a set of calibrated weighing scales must be available and functional. Hoses should be fitted with leak-free disconnect couplings and in good condition. Before using the recovery equipment, inspect and verify that it is properly maintained, and that any associated electrical components are sealed to prevent ignition in the event of refrigerant leakage. Consult the manufacturer if there is any uncertainty.
Recovered refrigerant should be returned to the refrigerant supplier in appropriate recovery cylinders, along with the relevant Waste Transfer Note. Do not mix refrigerants in recovery units, especially in cylinders.
If compressors or compressor oils are to be removed, ensure they have been evacuated to an acceptable level to eliminate residual flammable refrigerant in the lubricant. Perform the evacuation before returning the compressor to the supplier. To speed up this process, only heat the compressor body electrically. Drain oil from the system safely.

17.3.4 Decommissioning

Before beginning this procedure, the technician must be fully familiar with the equipment and all its details. It is recommended that all refrigerants be recovered safely. Prior to recovery, samples of oil and refrigerant should be taken for analysis before reusing reclaimed refrigerant. Ensure electrical power is available before starting the task.
1. Familiarize yourself with the equipment and its operation.
2. Isolate the system electrically.
3. Before attempting the procedure, ensure that:
- Mechanical handling equipment is available (if needed) for moving refrigerant cylinders.
- All personal protective equipment is available and used correctly.
- The recovery process is supervised at all times by a competent individual.
- Recovery equipment and cylinders comply with relevant standards.
4. Pump down the refrigerant system if possible.
5. If creating a vacuum is not possible, use a manifold to remove refrigerant from different parts of the system.
6. Ensure the cylinders are placed on the scales before recovery begins.
7. Start the recovery machine and operate it according to the manufacturer’s instructions.
8. Do not overfill the cylinders (fill to no more than 80% of their volume).
9. Do not exceed the cylinders’ maximum working pressure, even temporarily.
10. Once the cylinders are correctly filled and the process is complete, immediately remove the cylinders and equipment from the site and close all isolation valves on the equipment.
11. Recovered refrigerant must not be reused in any other refrigeration system unless it has been cleaned and inspected.

18 Check list

Engineering Commissioning and Acceptance Form

I. Project Information

User Information	Project name		User name			
	Installation address		Contact number			
Dealer Information	Company name					
	Contact		Contact number			
Installation Company	Company name					
	Installation manager		Contact number			
Temperature at Installation Site	Average surface water temperature		User demand	Cooling/heating demand		
	Summer highest temperature			Air-conditioned area		
	Winter lowest temperature			Hot water demand		
Unit Information	Unit number	Unit model	Unit barcode	Unit number	Unit model	Unit barcode
Other Project Information	Terminal:		☐Fan coil ☐Floor heating ☐Radiator			
	Buffer/insulation tank (T)			Electric heater configuration (kW)		
	Rated head of primary pump (m):			Rated flow (m³/h):		
	Rated head of secondary pump (m):			Rated flow (m³/h):		

II. Pre-acceptance Inspection

Inspection Item		Technical Specification Requirements	Result	Remarks
Unit Installation	Installation environment	No strong radiation, no corrosive sources, no oil fumes; the unit's noise and exhaust must not affect the activities of surrounding personnel; windbreak walls shall be installed in strong wind environments.		
	Maintenance space	Sufficient maintenance space (side air outlet: over 0.5 m).		
	Ventilation and heat dissipation	Good ventilation and heat dissipation (air outlets shall be 3 m away from obstacles; the rear air return of multiple units shall be at least 1 m away from other units and obstacles).		
	Condensate drainage	Bottom-suspended installation with a reasonable condensate drainage design.		
	Bottom foundation	Sufficient foundation height.		
	Fixation and vibration damping measures	Fixed with bolts and equipped with rubber or spring vibration dampers.		
	Unit installation spacing	Compliance with the unit installation spacing requirements specified in Section 6.1.		
	Terminal fan coil installation	Smooth and reasonable condensate drainage.		
		Installation of indoor air outlets and return air inlets meets installation standards.		
		Inspection openings reserved in accordance with standards.		
		If fan coils are equipped with solenoid valves, ensure that 30% or more of the fan coils are installed with three-way solenoid valves.		
Electrical System	Unit distribution box (if any)	An independent distribution box is installed for the project.		
		The distribution box is equipped with a leakage protection device, and electrical components have rain and moisture protection measures.		
		The distribution box is placed at least 50 cm above the ground and securely fixed.		
		Specifications of the circuit breaker and wires in the distribution box meet the maximum power requirements for unit operation.		
		Copper lugs for load connections are securely fastened.		
	Main unit control box	The phase sequence and neutral wire connections between the unit, water pump, and control box are correct.		
		The main unit control box is properly grounded and must not be connected to gas pipes, water pipes, lightning arresters, or telephone lines.		
		Copper lugs for load connections in the unit control box are securely fastened.		
		The connection between the unit and the water tank temperature sensor is properly made.		
		The circulating water pump is interlocked with the main unit, with correct wiring.		
	Power cable diameter	The diameters of power cables for the total power supply and main unit comply with design requirements.		

		The diameters of power cables for the water pump, electric heater, and other loads comply with design requirements.		
	Signal cables	The connection between the unit and the wired controller is properly made.		
		The connection between the solenoid valve and the room thermostat is properly made.		
		The connection between the room thermostat and fan coils is properly made.		
		The smart control wiring of the room thermostat is properly connected.		
	Selection of air circuit breaker (ACB)	The main air circuit breaker (ACB) of the distribution box and the ACB for the main unit comply with design requirements.		
		ACBs for loads such as water pumps and electric heaters comply with design requirements.		
		The specifications of AC contactors for the water pump and other components comply with design requirements.		
	Circuit installation	Connection cables between the distribution box, unit, and water pump are routed through cable troughs or conduits.		
		High-voltage (HV) and low-voltage (LV) wires are installed separately to prevent signal interference.		
		The distribution box (including ACBs and terminal blocks) and power supply terminals of loads (e.g., the main unit) are installed and securely tightened.		
	Voltage detection	Phase A to neutral voltage		
		Phase B to neutral voltage		
		Phase C to neutral voltage		
		380V±7%: (354V~407V); 220V±7%: (205V~236V); three-phase voltage imbalance <2%		
Water System	Piping design	For water systems with ≥3 units, the water piping is installed in a reverse return configuration.		
	Pipe specifications	The main pipe diameter complies with design requirements.		
		The diameters of the unit's and terminal's inlet and outlet pipes comply with design requirements.		
	Pipe fixation	Pipes are securely fixed in accordance with design requirements.		
	Pipe insulation	When water pipes pass through wall openings, foam sealant must be applied to both sides of the opening for stability and to prevent thermal bridge formation.		
		Pipes between the unit, water tank, and terminals are insulated in accordance with specifications.		
	Pipe valves	Pipe valve types are correctly selected in compliance with design requirements.		
		Unit valves can be opened properly.		
		The one-way valve on the piping is installed in the proper direction.		
		The Y-strainer and two/three-way solenoid valve are installed on the terminal inlet pipe.		

	Flexible connections	Flexible connections are installed between the unit and pipes to prevent vibration.		
		Flexible connections are installed at both ends of water pumps to prevent vibration.		
		Flexible connections and valves are installed on the inlet and outlet pipes of the fan coil.		
	Pressure relief valve	Pressure relief valves are installed on the unit's return water pipe.		
	Air vent valve	Automatic air vent valves are installed on the supply and return main pipes.		
	Drain valve	Drain valves are installed at the lowest point of the water system.		
	Water replenishment valve	Water replenishment valves are installed on the unit's inlet/return water pipes.		
	Microbubble deaerator	A microbubble deaerator is installed on the unit's outlet pipe side.		
	Anti-freeze valve	Ensure complete drainage at the valve installation location.		
	Differential bypass valve	A differential bypass valve is installed in the primary circulation system equipped with solenoid valves.		
		It is installed between the unit's inlet and outlet pipes, with the direction from outlet to inlet.		
	Y-strainer	The Y-strainer is correctly installed on the unit's water inlet pipe or upstream of the water pump.		
	Water tank installation	It must be installed on a load-bearing platform (steel frame or concrete foundation).		
		The water tank openings are fabricated and installed in accordance with design requirements.		
		The water tank temperature sensor is securely installed in the sensor pocket, with an insertion depth of over 250 mm. The sensor pocket is vertically aligned with the lower circulation port and installed 50 mm higher than the port.		
		The high water level probe is installed 150 mm below the horizontal level of the overflow outlet's bottom.		
	Water pump installation	The rated head and flow rate of the circulating water pump comply with design requirements, and it is installed in the proper direction.		
		The pump is installed horizontally with appropriate vibration reduction and rain protection measures.		
	Installation of water replenishment system	Open or closed water replenishment system.		
		For closed systems, check that the pressure is sufficient.		
	Water treatment system (hot water)	A water softening system is installed in accordance with design requirements (e.g., resin softening, silica phosphate crystal softening).		
		Water quality complies with the pH and hardness requirements specified in the technical manual.		
	Drainage and leak detection	The water system is pressurized, leak-checked, and drained.		

III. Unit Acceptance and Commissioning

☐Power-on test to verify the correct phase sequence of the main unit's power wiring and the water pump's power lines.;
☐Preheat the compressor for 12 hours with the unit powered on but not operating.;
☐Test whether terminal fan coils can be turned on/off normally: check that the speed, cooling/heating switch, and two/three-way valve are functioning properly.;
☐Before operation, manually start the water pump to check for normal operation.;
☐Fill the water system (if filling fails or the test run is interrupted (e.g., due to power outage), drain and blow out the water to prevent freezing damage to the unit's heat exchanger and pipes).;
☐Air purging of the water system: Reverse, sectional, or layered methods can be used for rapid air purging.;
☐Start the unit and test the wired controller and thermostat for functions such as on/off, temperature adjustment, mode switching, and full function switching.
☐Operate the unit for 30 minutes, then check and record the following real-time operating data: operating current, high/low pressure, inlet/outlet water temperature, discharge temperature, return gas temperature, coil temperature, etc., as shown in the table below.;
☐If abnormalities are detected during the above data monitoring, stop the unit immediately and conduct troubleshooting.;
☐After 4 hours of normal operation, stop the unit and clean the Y-strainer to remove pipe debris.;
☐Restart the unit and continue data monitoring. If no abnormalities are found, the unit's commissioning and acceptance are complete..

Test Items	Test Results
Ambient temperature	
Inlet water temperature	
Outlet water temperature	
Water tank temperature	
Compressor current	
Discharge temperature	
Coil temperature	
suction temperature	
Operating current	
Inlet temperature of vapor injection	
Outlet temperature of vapor injection	
System anti-freeze temperature	
Opening of electronic expansion valve	
Low pressure	
Wifi signal	

IV. Delivery and Training

1. Delivery: ☐User Manual

<table>
<tr><td colspan="3">2. User training:
☐Equipment operation: on/off, temperature setting, function switching, status checking, etc.;
☐Unit maintenance: regular cleaning of Y-strainer and piping, regular power cable inspection, regular cleaning of unit fins, regular cleaning of return air filter, etc.;
☐Simple troubleshooting: water flow fault, high pressure fault, phase sequence fault, etc.;
☐How to protect unit from freezing in winter</td></tr>
<tr><td>Rectification Requirements</td><td colspan="2"></td></tr>
<tr><td rowspan="4">Signature Confirmation</td><td>Acceptance Person</td><td></td></tr>
<tr><td>Date</td><td>MM/DD/YY</td></tr>
<tr><td>User Representative</td><td></td></tr>
<tr><td>Date</td><td>MM/DD/YY</td></tr>
</table>

ANNEX

ANNEX A. Factory default settings

iGXC08

Type	No.	Name	Range	Default	Unit
User parameter	1	CTRL_MODE	[1]Cooling;[2]Heating;[3]Auto	Heating	/
User parameter	2	COOL_TEMP_SET	-15~35	7	℃
User parameter	3	HEAT_TEMP_SET	0~105	55	℃
User parameter	4	HOT_WATER_TEMP_SET	0~100	60	℃
User parameter	5	COOL_ROOM_TEMP_SET	16~30	26	℃
User parameter	6	HEAT_ROOM_TEMP_SET	16~30	20	℃
User parameter	9	HEAT_TEMP_SET_B	0~105	60	℃
User parameter	10	HEAT_ROOM_TEMP_SET_B	16~30	26	℃
User parameter	11	POWER_MODE	[0]Standard;[1]Turbo;[2]Silent;[3]Auto	Standard	/
User parameter	13	TIMED_DISINFECTION_FUNCTION	[0]Disable;[1]Enable	Disable	/
User parameter	14	DISINFECTION_TEMP	60~70	65	℃
User parameter	15	DISINFECTION_CYCLE_MAX	90~300	210	Min
User parameter	16	DISINFECTION_HIGH_TEMP_TIME	5~60	15	Min
User parameter	26	Zone A Cool Curve	[0]Disable;[1]Low Temp. Curve1;[2]Low Temp. Curve2;[3]Low Temp. Curve3;[4]Low Temp. Curve4;[5]Low Temp. Curve5;[6]Low Temp. Curve6;[7]Low Temp. Curve7;[8]Low	Disable	/

			Temp. Curve8;[9]High Temp. Curve1;[10]High Temp. Curve2;[11]High Temp. Curve3;[12]High Temp. Curve4;[13]High Temp. Curve5;[14]High Temp. Curve6;[15]High Temp. Curve7;[16]High Temp. Curve8;[17]Curve9		
User parameter	27	Zone A Heat Curve	[0]Disable;[1]Low Temp. Curve1;[2]Low Temp. Curve2;[3]Low Temp. Curve3;[4]Low Temp. Curve4;[5]Low Temp. Curve5;[6]Low Temp. Curve6;[7]Low Temp. Curve7;[8]Low Temp. Curve8;[9]High Temp. Curve1;[10]High Temp. Curve2;[11]High Temp. Curve3;[12]High Temp. Curve4;[13]High Temp. Curve5;[14]High Temp. Curve6;[15]High Temp. Curve7;[16]High Temp. Curve8;[17]Curve9	Disable	/
User parameter	29	Zone B Heat Curve	[0]Disable;[1]Low Temp. Curve1;[2]Low Temp. Curve2;[3]Low Temp. Curve3;[4]Low Temp. Curve4;[5]Low Temp. Curve5;[6]Low Temp. Curve6;[7]Low Temp. Curve7;[8]Low Temp. Curve8;[9]High Temp. Curve1;[10]High Temp. Curve2;[11]High Temp. Curve3;[12]High Temp. Curve4;[13]High Temp. Curve5;[14]High Temp. Curve6;[15]High Temp. Curve7;[16]High Temp. Curve8;[17]Curve9	Disable	/
User parameter	30	Curve#9_COOL_TA_1	-5~46	35	℃
User parameter	31	Curve#9_COOL_TA_2	-5~46	25	℃
User parameter	32	Curve#9_COOL_TWout2_1	5~25	10	℃
User parameter	33	Curve#9_COOL_TWout2_2	5~25	16	℃
User parameter	34	Curve#9_HEAT_TA_1	-25~35	7	℃
User parameter	35	Curve#9_HEAT_TA_2	-25~35	-5	℃
User parameter	36	Curve#9_HEAT_TWout2_1	25~65	28	℃
User parameter	37	Curve#9_HEAT_TWout2_2	25~65	35	℃
User parameter	38	00#UNIT	[0]Disable;[1]Enable	Enable	/
User parameter	39	01#UNIT	[0]Disable;[1]Enable	Enable	/

User parameter	40	02#UNIT	[0]Disable;[1]Enable	Enable	/
User parameter	41	03#UNIT	[0]Disable;[1]Enable	Enable	/
User parameter	42	04#UNIT	[0]Disable;[1]Enable	Enable	/
User parameter	43	05#UNIT	[0]Disable;[1]Enable	Enable	/
User parameter	44	06#UNIT	[0]Disable;[1]Enable	Enable	/
User parameter	45	07#UNIT	[0]Disable;[1]Enable	Enable	/
User parameter	46	LED Strip Switch	[0]Disable; [1]Enable	Disable	/
System parameter	5	WIRE_SW_TYPE	[0]Toggle Switch;[1]Pulse Switch	Toggle Switch	/
System parameter	7	POWER_DOWN_MEM	[0]Disable;[1]Enable	Enable	/
System parameter	8	POWER_ON_AUTO_RUN	[0]Disable;[1]Enable	Disable	/
System parameter	9	PUMPf_RUN_MODE	[0]Always;[1]Interval;[2]Save	Interval	/
System parameter	10	TEMP_CTRL_OBJ	[0]Inlet Temp.;[1]Outlet Temp.;[2]Buffer Tank Temp.	Buffer Tank Temp.	/
System parameter	11	COOL_TEMP_CORR	-10~10	0	℃
System parameter	12	HEAT_TEMP_CORR	-10~10	0	℃
System parameter	17	DHW_FUNCTION	[0]Disable;[1]Enable	Enable	/
System parameter	18	DHW_dT	0~20	5	℃
System parameter	19	CRANKCASE_HEATER_ON_TA	-10~20	12	℃

System parameter	20	CRANKCASE_HEATER_OFF_TA	-10~20	14	℃
System parameter	23	PWRD_TIME_MIN	0~48	4	h
System parameter	24	PWRD_TIME_MAX	0~96	48	h
System parameter	25	PREHT_TIME_MIN	0~999	10	Min
System parameter	26	PREHT_TIME_MAX	0~999	50	Min
System parameter	31	REMOTE_SW_TYPE	[0]Disable;[1]Linked Action Effective;[2]Linked Closed Effective;[3]Remote On/Off;[4]Remote Tank Heater;[5]Remote External Heat Source	Remote On/Off	/
System parameter	35	ZONE_CTRL	[0]One-zone Water Temp.;[1]One-zone Room Temp.;[2]Two-zone Water Temp.;[3]Two-zone(Water Temp.+ Room Temp.)	One-zone Water Temp.	/
System parameter	36	DHW_PUMPf_MODE	[0]Disable;[1]Always;[2]Interval;[3]Save	Disable	/
System parameter	37	TBH_RELAY_dT	0~20	0	℃
System parameter	38	BOTTOM HEATER_TYPE	[0]Defrosting Pan Heater;[1]Low AT Pan Heater	Defrosting Pan Heater	/
System parameter	39	BOTTOM HEATER_ON_TA	-50~50	7	℃
System parameter	42	SMART_GRID	[0]Disable;[1]Enable	Disable	/
System parameter	44	PUMPf_INTER_OFF_TIME	5~999	10	Min
System parameter	45	MODE_WIRE_CTRL	[0]Disable;[1]Enable	Disable	/
Switch & Sensor	1	DI_LDIlp	[0]Normally Open;[1]Normally Closed;[2]Disable	Normally Closed	/
Switch & Sensor	2	DI_LDIhp	[0]Normally Open;[1]Normally Closed;[2]Disable	Normally Closed	/
Switch & Sensor	3	OVERLOAD	[0]Normally Open;[1]Normally Closed;[2]Disable	Normally Closed	/

Switch & Sensor	4	DI_LDIw	[0]Normally Open;[1]Normally Closed;[2]Disable	Normally Closed	/
Switch & Sensor	5	DI_CUSTOM_FUN	[0]OFF;[1]RT_CTRL;[2]MODE_WIRE_CTRL	OFF	/
Switch & Sensor	20	TFLHin_SENSOR	[0]Disable;[1]Enable	Disable	/
Switch & Sensor	21	TWout3_SENSOR	[0]Disable;[1]Enable	Disable	/
Switch & Sensor	22	EVU_DI_TYPE	[0]Normally Open;[1]Normally Closed;[2]Disable	Normally Open	/
Switch & Sensor	23	SG_DI_TYPE	[0]Normally Open;[1]Normally Closed;[2]Disable	Normally Open	/
Switch & Sensor	33	TBT1_SENSOR	[0]Disable;[1]Enable	Enable	/
Switch & Sensor	34	TBT2_SENSOR	[0]Disable;[1]Enable	Disable	/
Switch & Sensor	38	IBH1 POWER	0~30000	0	/
Switch & Sensor	39	IBH2 POWER	0~30000	0	/
Switch & Sensor	40	IDLE POWER	0~30000	12	/
Switch & Sensor	41	OTHER RUN POWER	0~30000	0	/
Energy control	2	COOL_LOAD_dT	-20~20	2	℃
Energy control	3	COOL_UNLOAD_dT	-20~20	2	℃
Energy control	4	HEAT_LOAD_dT	-20~20	4	℃
Energy control	5	HEAT_UNLOAD_dT	-20~20	2	℃
Energy control	6	ROOM_TEMP_dT	1~10	4	℃

Energy control	7	CL_SET_T_MIN	-10~35	1	/
Energy control	8	CL_SET_T_MAX	-10~35	26	℃
Energy control	9	HT_SET_T_MIN	0~100	28	℃
Energy control	10	HT_SET_T_MAX	0~100	75	℃
Energy control	17	AUTO_CL_TA_MIN	20~29	25	℃
Energy control	18	AUTO_HT_TA_MAX	10~17	17	℃
Energy control	22	IBH FUNCTION	[0]Disable; [1]Only heating; [2]Only hot water; [3]Heating & Hot water	Heating & Hot Water	/
Energy control	23	AHS FUNCTION	[0]Disable; [1]Only heating; [2]Only hot water; [3]Heating & Hot water	Disable	/
Energy control	24	IBH_ON_HI_dT	0~10	5	℃
Energy control	25	IBH_ON_LO_dT	0~10	2	℃
Energy control	26	IBH_GEAR	1~3	1	/
Energy control	27	IBH_ON_DLY	15~120	30	℃
Energy control	28	IBH_ON_TA	-15~10	-5	℃
Energy control	29	IBH_ON_dT	2~10	5	℃
Energy control	30	TBH_ON_DLY	60~240	90	℃
Energy control	31	TBH_ON_TA	-50~30	5	℃
Energy control	32	AHS_ON_DLY	15~120	30	℃

Energy control	33	AHS_ON_dT	2~10	5	℃
Energy control	34	AHS_OFF_dT	0~5	0	℃
Energy control	35	AHS_ON_Env.	-15~10	5	℃
Energy control	36	DHW_ON_MAX	10~600	90	Min
Energy control	37	AC_ON_MAX	10~600	30	Min
Project setting	6	PUMPd_RUN_t	5~120	5	Min
Project setting	7	PUMPd_DISINFECTION	[0]Disable; [1]Enable	Disable	/
Project setting	8	PUMPd_TIMER	[0]Disable; [1]Enable	Disable	/
Project setting	21	ZONE_B_HT_TD	[0] Radiator; [1] Fan coil unit; [2] Floor heating	Floor heating	/
Project setting	40	UNIT_MAX	1~8	1	/
Project setting	41	DHW_UNIT_NUM	1~8	1	/
Project setting	43	PUMPo_FUNCTION	[0]Zone A External Circulation Pump;[1]Zone A&B External Circulation Pump	Zone A External Circulation Pump	/
Project setting	46	BMS_DATA_FMT	[0]8,N,1;[1]8,N,2;[2]8,O,1;[3]8,E,1	8,N,1	/
Project setting	47	BMS_BAUDRATE	[0]2400;[1]4800;[2]9600;[3]19200;[4]38400;[5]57600	9600	/
Project setting	48	BMS_ADDR	1~247	1	/

Type	No.	Name	Range	Default	Unit
User parameter	1	CTRL_MODE	[1]Cooling;[2]Heating;[3]Auto	Heating	/
User parameter	2	COOL_TEMP_SET	-15~35	7	℃
User parameter	3	HEAT_TEMP_SET	0~105	55	℃
User parameter	4	HOT_WATER_TEMP_SET	0~100	60	℃
User parameter	5	COOL_ROOM_TEMP_SET	16~30	26	℃
User parameter	6	HEAT_ROOM_TEMP_SET	16~30	20	℃
User parameter	9	HEAT_TEMP_SET_B	0~105	60	℃
User parameter	10	HEAT_ROOM_TEMP_SET_B	16~30	26	℃
User parameter	11	POWER_MODE	[0]Standard;[1]Turbo;[2]Silent;[3]Auto	Standard	/
User parameter	13	TIMED_DISINFECTION_FUNCTION	[0]Disable;[1]Enable	Disable	/
User parameter	14	DISINFECTION_TEMP	60~70	65	℃
User parameter	15	DISINFECTION_CYCLE_MAX	90~300	210	Min
User parameter	16	DISINFECTION_HIGH_TEMP_TIME	5~60	15	Min
User parameter	26	Zone A Cool Curve	[0]Disable;[1]Low Temp. Curve1;[2]Low Temp. Curve2;[3]Low Temp. Curve3;[4]Low Temp. Curve4;[5]Low Temp. Curve5;[6]Low Temp. Curve6;[7]Low Temp. Curve7;[8]Low Temp. Curve8;[9]High Temp. Curve1;[10]High Temp. Curve2;[11]High Temp. Curve3;[12]High Temp. Curve4;[13]High Temp. Curve5;[14]High Temp. Curve6;[15]High Temp. Curve7;[16]High Temp. Curve8;[17]Curve9	Disable	/

User parameter	27	Zone A Heat Curve	[0]Disable;[1]Low Temp. Curve1;[2]Low Temp. Curve2;[3]Low Temp. Curve3;[4]Low Temp. Curve4;[5]Low Temp. Curve5;[6]Low Temp. Curve6;[7]Low Temp. Curve7;[8]Low Temp. Curve8;[9]High Temp. Curve1;[10]High Temp. Curve2;[11]High Temp. Curve3;[12]High Temp. Curve4;[13]High Temp. Curve5;[14]High Temp. Curve6;[15]High Temp. Curve7;[16]High Temp. Curve8;[17]Curve9	Disable	/
User parameter	29	Zone B Heat Curve	[0]Disable;[1]Low Temp. Curve1;[2]Low Temp. Curve2;[3]Low Temp. Curve3;[4]Low Temp. Curve4;[5]Low Temp. Curve5;[6]Low Temp. Curve6;[7]Low Temp. Curve7;[8]Low Temp. Curve8;[9]High Temp. Curve1;[10]High Temp. Curve2;[11]High Temp. Curve3;[12]High Temp. Curve4;[13]High Temp. Curve5;[14]High Temp. Curve6;[15]High Temp. Curve7;[16]High Temp. Curve8;[17]Curve9	Disable	/
User parameter	30	Curve#9_COOL _TA_1	-5~46	35	℃
User parameter	31	Curve#9_COOL _TA_2	-5~46	25	℃
User parameter	32	Curve#9_COOL _TWout2_1	5~25	10	℃
User parameter	33	Curve#9_COOL _TWout2_2	5~25	16	℃
User parameter	34	Curve#9_HEAT_ TA_1	-25~35	7	℃
User parameter	35	Curve#9_HEAT_ TA_2	-25~35	-5	℃
User parameter	36	Curve#9_HEAT_ TWout2_1	25~65	28	℃
User parameter	37	Curve#9_HEAT_ TWout2_2	25~65	35	℃
User parameter	38	00#UNIT	[0]Disable;[1]Enable	Enable	/
User parameter	39	01#UNIT	[0]Disable;[1]Enable	Enable	/
User parameter	40	02#UNIT	[0]Disable;[1]Enable	Enable	/
User parameter	41	03#UNIT	[0]Disable;[1]Enable	Enable	/

User parameter	42	04#UNIT	[0]Disable;[1]Enable	Enable	/
User parameter	43	05#UNIT	[0]Disable;[1]Enable	Enable	/
User parameter	44	06#UNIT	[0]Disable;[1]Enable	Enable	/
User parameter	45	07#UNIT	[0]Disable;[1]Enable	Enable	/
User parameter	46	LED Strip Switch	[0]Disable; [1]Enable	Disable	/
System parameter	5	WIRE_SW_TYPE	[0]Toggle Switch;[1]Pulse Switch	Toggle Switch	/
System parameter	7	POWER_DOWN_MEM	[0]Disable;[1]Enable	Enable	/
System parameter	8	POWER_ON_AUTO_RUN	[0]Disable;[1]Enable	Disable	/
System parameter	9	PUMPf_RUN_MODE	[0]Always;[1]Interval;[2]Save	Interval	/
System parameter	10	TEMP_CTRL_OBJ	[0]Inlet Temp.;[1]Outlet Temp.;[2]Buffer Tank Temp.	Buffer Tank Temp.	/
System parameter	11	COOL_TEMP_CORR	-10~10	0	℃
System parameter	12	HEAT_TEMP_CORR	-10~10	0	℃
System parameter	17	DHW_FUNCTION	[0]Disable;[1]Enable	Enable	/
System parameter	18	DHW_dT	0~20	5	℃
System parameter	19	CRANKCASE_HEATER_ON_TA	-10~20	12	℃
System parameter	20	CRANKCASE_HEATER_OFF_TA	-10~20	14	℃
System parameter	23	PWRD_TIME_MIN	0~48	4	h

System parameter	24	PWRD_TIME_MAX	0~96	48	h
System parameter	25	PREHT_TIME_MIN	0~999	10	Min
System parameter	26	PREHT_TIME_MAX	0~999	50	Min
System parameter	31	REMOTE_SW_TYPE	[0]Disable;[1]Linked Action Effective;[2]Linked Closed Effective;[3]Remote On/Off;[4]Remote Tank Heater;[5]Remote External Heat Source	Remote On/Off	/
System parameter	35	ZONE_CTRL	[0]One-zone Water Temp.;[1]One-zone Room Temp.;[2]Two-zone Water Temp.;[3]Two-zone(Water Temp.+ Room Temp.)	One-zone Water Temp.	/
System parameter	36	DHW_PUMPf_MODE	[0]Disable;[1]Always;[2]Interval;[3]Save	Disable	/
System parameter	37	TBH_RELAY_dT	0~20	0	℃
System parameter	38	BOTTOM HEATER_TYPE	[0]Defrosting Pan Heater;[1]Low AT Pan Heater	Defrosting Pan Heater	/
System parameter	39	BOTTOM HEATER_ON_TA	-50~50	7	℃
System parameter	42	SMART_GRID	[0]Disable;[1]Enable	Disable	/
System parameter	44	PUMPf_INTER_OFF_TIME	5~999	10	Min
System parameter	45	MODE_WIRE_CTRL	[0]Disable;[1]Enable	Disable	/
Switch & Sensor	1	DI_LDIlp	[0]Normally Open;[1]Normally Closed;[2]Disable	Normally Closed	/
Switch & Sensor	2	DI_LDIhp	[0]Normally Open;[1]Normally Closed;[2]Disable	Normally Closed	/
Switch & Sensor	3	OVERLOAD	[0]Normally Open;[1]Normally Closed;[2]Disable	Normally Closed	/
Switch & Sensor	4	DI_LDIw	[0]Normally Open;[1]Normally Closed;[2]Disable	Normally Closed	/
Switch & Sensor	5	DI_CUSTOM_FUN	[0]OFF;[1]RT_CTRL;[2]MODE_WIRE_CTRL	OFF	/

Switch & Sensor	20	TFLHin_SENSOR	[0]Disable;[1]Enable	Disable	/
Switch & Sensor	21	TWout3_SENSOR	[0]Disable;[1]Enable	Disable	/
Switch & Sensor	22	EVU_DI_TYPE	[0]Normally Open;[1]Normally Closed;[2]Disable	Normally Open	/
Switch & Sensor	23	SG_DI_TYPE	[0]Normally Open;[1]Normally Closed;[2]Disable	Normally Open	/
Switch & Sensor	33	TBT1_SENSOR	[0]Disable;[1]Enable	Enable	/
Switch & Sensor	34	TBT2_SENSOR	[0]Disable;[1]Enable	Disable	/
Switch & Sensor	38	IBH1 POWER	0~30000	0	/
Switch & Sensor	39	IBH2 POWER	0~30000	0	/
Switch & Sensor	40	IDLE POWER	0~30000	12	/
Switch & Sensor	41	OTHER RUN POWER	0~30000	0	/
Energy control	2	COOL_LOAD_dT	-20~20	2	℃
Energy control	3	COOL_UNLOAD_dT	-20~20	2	℃
Energy control	4	HEAT_LOAD_dT	-20~20	4	℃
Energy control	5	HEAT_UNLOAD_dT	-20~20	2	℃
Energy control	6	ROOM_TEMP_dT	1~10	4	℃
Energy control	7	CL_SET_T_MIN	-10~35	1	/
Energy control	8	CL_SET_T_MAX	-10~35	26	℃

Energy control	9	HT_SET_T_MIN	0~100	28	℃
Energy control	10	HT_SET_T_MAX	0~100	75	℃
Energy control	17	AUTO_CL_TA_MIN	20~29	25	℃
Energy control	18	AUTO_HT_TA_MAX	10~17	17	℃
Energy control	22	IBH FUNCTION	[0]Disable; [1]Only heating; [2]Only hot water; [3]Heating & Hot water	Heating & Hot Water	/
Energy control	23	AHS FUNCTION	[0]Disable; [1]Only heating; [2]Only hot water; [3]Heating & Hot water	Disable	/
Energy control	24	IBH_ON_HI_dT	0~10	5	℃
Energy control	25	IBH_ON_LO_dT	0~10	2	℃
Energy control	26	IBH_GEAR	1~3	1	/
Energy control	27	IBH_ON_DLY	15~120	30	℃
Energy control	28	IBH_ON_TA	-15~10	-5	℃
Energy control	29	IBH_ON_dT	2~10	5	℃
Energy control	30	TBH_ON_DLY	60~240	90	℃
Energy control	31	TBH_ON_TA	-50~30	5	℃
Energy control	32	AHS_ON_DLY	15~120	30	℃
Energy control	33	AHS_ON_dT	2~10	5	℃
Energy control	34	AHS_OFF_dT	0~5	0	℃

Energy control	35	AHS_ON_Env.	-15~10	5	℃
Energy control	36	DHW_ON_MAX	10~600	90	Min
Energy control	37	AC_ON_MAX	10~600	30	Min
Project setting	6	PUMPd_RUN_t	5~120	5	Min
Project setting	7	PUMPd_DISINFECTION	[0]Disable; [1]Enable	Disable	/
Project setting	8	PUMPd_TIMER	[0]Disable; [1]Enable	Disable	/
Project setting	21	ZONE_B_HT_TD	[0] Radiator; [1] Fan coil unit; [2] Floor heating	Floor heating	/
Project setting	40	UNIT_MAX	1~8	1	/
Project setting	41	DHW_UNIT_NUM	1~8	1	/
Project setting	43	PUMPo_FUNCTION	[0]Zone A External Circulation Pump;[1]Zone A&B External Circulation Pump	Zone A External Circulation Pump	/
Project setting	46	BMS_DATA_FMT	[0]8,N,1;[1]8,N,2;[2]8,O,1;[3]8,E,1	8,N,1	/
Project setting	47	BMS_BAUDRATE	[0]2400;[1]4800;[2]9600;[3]19200;[4]38400;[5]57600	9600	/
Project setting	48	BMS_ADDR	1~247	1	/

Type	No.	Name	Range	Default	Unit
User parameter	1	CTRL_MODE	[1]Cooling;[2]Heating;[3]Auto	Heating	/
User parameter	2	COOL_TEMP_SET	-15~35	7	℃
User parameter	3	HEAT_TEMP_SET	0~105	55	℃
User parameter	4	HOT_WATER_TEMP_SET	0~100	60	℃
User parameter	5	COOL_ROOM_TEMP_SET	16~30	26	℃
User parameter	6	HEAT_ROOM_TEMP_SET	16~30	20	℃
User parameter	9	HEAT_TEMP_SET_B	0~105	60	℃
User parameter	10	HEAT_ROOM_TEMP_SET_B	16~30	26	℃
User parameter	11	POWER_MODE	[0]Standard;[1]Turbo;[2]Silent;[3]Auto	Standard	/
User parameter	13	TIMED_DISINFECTION_FUNCTION	[0]Disable;[1]Enable	Disable	/
User parameter	14	DISINFECTION_TEMP	60~70	65	℃
User parameter	15	DISINFECTION_CYCLE_MAX	90~300	210	Min
User parameter	16	DISINFECTION_HIGH_TEMP_TIME	5~60	15	Min
User parameter	26	Zone A Cool Curve	[0]Disable;[1]Low Temp. Curve1;[2]Low Temp. Curve2;[3]Low Temp. Curve3;[4]Low Temp. Curve4;[5]Low Temp. Curve5;[6]Low Temp. Curve6;[7]Low Temp. Curve7;[8]Low Temp. Curve8;[9]High Temp. Curve1;[10]High Temp. Curve2;[11]High Temp. Curve3;[12]High Temp. Curve4;[13]High Temp. Curve5;[14]High Temp. Curve6;[15]High Temp. Curve7;[16]High Temp. Curve8;[17]Curve9	Disable	/

User parameter	27	Zone A Heat Curve	[0]Disable;[1]Low Temp. Curve1;[2]Low Temp. Curve2;[3]Low Temp. Curve3;[4]Low Temp. Curve4;[5]Low Temp. Curve5;[6]Low Temp. Curve6;[7]Low Temp. Curve7;[8]Low Temp. Curve8;[9]High Temp. Curve1;[10]High Temp. Curve2;[11]High Temp. Curve3;[12]High Temp. Curve4;[13]High Temp. Curve5;[14]High Temp. Curve6;[15]High Temp. Curve7;[16]High Temp. Curve8;[17]Curve9	Disable	/
User parameter	29	Zone B Heat Curve	[0]Disable;[1]Low Temp. Curve1;[2]Low Temp. Curve2;[3]Low Temp. Curve3;[4]Low Temp. Curve4;[5]Low Temp. Curve5;[6]Low Temp. Curve6;[7]Low Temp. Curve7;[8]Low Temp. Curve8;[9]High Temp. Curve1;[10]High Temp. Curve2;[11]High Temp. Curve3;[12]High Temp. Curve4;[13]High Temp. Curve5;[14]High Temp. Curve6;[15]High Temp. Curve7;[16]High Temp. Curve8;[17]Curve9	Disable	/
User parameter	30	Curve#9_COOL_TA_1	-5~46	35	℃
User parameter	31	Curve#9_COOL_TA_2	-5~46	25	℃
User parameter	32	Curve#9_COOL_TWout2_1	5~25	10	℃
User parameter	33	Curve#9_COOL_TWout2_2	5~25	16	℃
User parameter	34	Curve#9_HEAT_TA_1	-25~35	7	℃
User parameter	35	Curve#9_HEAT_TA_2	-25~35	-5	℃
User parameter	36	Curve#9_HEAT_TWout2_1	25~65	28	℃
User parameter	37	Curve#9_HEAT_TWout2_2	25~65	35	℃
User parameter	38	00#UNIT	[0]Disable;[1]Enable	Enable	/
User parameter	39	01#UNIT	[0]Disable;[1]Enable	Enable	/
User parameter	40	02#UNIT	[0]Disable;[1]Enable	Enable	/
User parameter	41	03#UNIT	[0]Disable;[1]Enable	Enable	/

User parameter	42	04#UNIT	[0]Disable;[1]Enable	Enable	/
User parameter	43	05#UNIT	[0]Disable;[1]Enable	Enable	/
User parameter	44	06#UNIT	[0]Disable;[1]Enable	Enable	/
User parameter	45	07#UNIT	[0]Disable;[1]Enable	Enable	/
User parameter	46	LED Strip Switch	[0]Disable; [1]Enable	Disable	/
System parameter	5	WIRE_SW_TYPE	[0]Toggle Switch;[1]Pulse Switch	Toggle Switch	/
System parameter	7	POWER_DOWN_MEM	[0]Disable;[1]Enable	Enable	/
System parameter	8	POWER_ON_AUTO_RUN	[0]Disable;[1]Enable	Disable	/
System parameter	9	PUMPf_RUN_MODE	[0]Always;[1]Interval;[2]Save	Interval	/
System parameter	10	TEMP_CTRL_OBJ	[0]Inlet Temp.;[1]Outlet Temp.;[2]Buffer Tank Temp.	Buffer Tank Temp.	/
System parameter	11	COOL_TEMP_CORR	-10~10	0	℃
System parameter	12	HEAT_TEMP_CORR	-10~10	0	℃
System parameter	17	DHW_FUNCTION	[0]Disable;[1]Enable	Enable	/
System parameter	18	DHW_dT	0~20	5	℃
System parameter	19	CRANKCASE_HEATER_ON_TA	-10~20	12	℃
System parameter	20	CRANKCASE_HEATER_OFF_TA	-10~20	14	℃
System parameter	23	PWRD_TIME_MIN	0~48	4	h

System parameter	24	PWRD_TIME_MAX	0~96	48	h
System parameter	25	PREHT_TIME_MIN	0~999	10	Min
System parameter	26	PREHT_TIME_MAX	0~999	50	Min
System parameter	31	REMOTE_SW_TYPE	[0]Disable;[1]Linked Action Effective;[2]Linked Closed Effective;[3]Remote On/Off;[4]Remote Tank Heater;[5]Remote External Heat Source	Remote On/Off	/
System parameter	35	ZONE_CTRL	[0]One-zone Water Temp.;[1]One-zone Room Temp.;[2]Two-zone Water Temp.;[3]Two-zone(Water Temp.+ Room Temp.)	One-zone Water Temp.	/
System parameter	36	DHW_PUMPf_MODE	[0]Disable;[1]Always;[2]Interval;[3]Save	Disable	/
System parameter	37	TBH_RELAY_dT	0~20	0	℃
System parameter	38	BOTTOM HEATER_TYPE	[0]Defrosting Pan Heater;[1]Low AT Pan Heater	Defrosting Pan Heater	/
System parameter	39	BOTTOM HEATER_ON_TA	-50~50	7	℃
System parameter	42	SMART_GRID	[0]Disable;[1]Enable	Disable	/
System parameter	44	PUMPf_INTER_OFF_TIME	5~999	10	Min
System parameter	45	MODE_WIRE_CTRL	[0]Disable;[1]Enable	Disable	/
Switch & Sensor	1	DI_LDIlp	[0]Normally Open;[1]Normally Closed;[2]Disable	Normally Closed	/
Switch & Sensor	2	DI_LDIhp	[0]Normally Open;[1]Normally Closed;[2]Disable	Normally Closed	/
Switch & Sensor	3	OVERLOAD	[0]Normally Open;[1]Normally Closed;[2]Disable	Normally Closed	/
Switch & Sensor	4	DI_LDIw	[0]Normally Open;[1]Normally Closed;[2]Disable	Normally Closed	/
Switch & Sensor	5	DI_CUSTOM_FUN	[0]OFF;[1]RT_CTRL;[2]MODE_WIRE_CTRL	OFF	/

Switch & Sensor	20	TFLHin_SENSOR	[0]Disable;[1]Enable	Disable	/
Switch & Sensor	21	TWout3_SENSOR	[0]Disable;[1]Enable	Disable	/
Switch & Sensor	22	EVU_DI_TYPE	[0]Normally Open;[1]Normally Closed;[2]Disable	Normally Open	/
Switch & Sensor	23	SG_DI_TYPE	[0]Normally Open;[1]Normally Closed;[2]Disable	Normally Open	/
Switch & Sensor	33	TBT1_SENSOR	[0]Disable;[1]Enable	Enable	/
Switch & Sensor	34	TBT2_SENSOR	[0]Disable;[1]Enable	Disable	/
Switch & Sensor	38	IBH1 POWER	0~30000	0	/
Switch & Sensor	39	IBH2 POWER	0~30000	0	/
Switch & Sensor	40	IDLE POWER	0~30000	15	/
Switch & Sensor	41	OTHER RUN POWER	0~30000	0	/
Energy control	2	COOL_LOAD_dT	-20~20	2	℃
Energy control	3	COOL_UNLOAD_dT	-20~20	2	℃
Energy control	4	HEAT_LOAD_dT	-20~20	4	℃
Energy control	5	HEAT_UNLOAD_dT	-20~20	2	℃
Energy control	6	ROOM_TEMP_dT	1~10	4	℃
Energy control	7	CL_SET_T_MIN	-10~35	1	/
Energy control	8	CL_SET_T_MAX	-10~35	26	℃

Energy control	9	HT_SET_T_MIN	0~100	28	℃
Energy control	10	HT_SET_T_MAX	0~100	75	℃
Energy control	17	AUTO_CL_TA_MIN	20~29	25	℃
Energy control	18	AUTO_HT_TA_MAX	10~17	17	℃
Energy control	22	IBH FUNCTION	[0]Disable; [1]Only heating; [2]Only hot water; [3]Heating & Hot water	Heating & Hot Water	/
Energy control	23	AHS FUNCTION	[0]Disable; [1]Only heating; [2]Only hot water; [3]Heating & Hot water	Disable	/
Energy control	24	IBH_ON_HI_dT	0~10	5	℃
Energy control	25	IBH_ON_LO_dT	0~10	2	℃
Energy control	26	IBH_GEAR	1~3	1	/
Energy control	27	IBH_ON_DLY	15~120	30	℃
Energy control	28	IBH_ON_TA	-15~10	-5	℃
Energy control	29	IBH_ON_dT	2~10	5	℃
Energy control	30	TBH_ON_DLY	60~240	90	℃
Energy control	31	TBH_ON_TA	-50~30	5	℃
Energy control	32	AHS_ON_DLY	15~120	30	℃
Energy control	33	AHS_ON_dT	2~10	5	℃
Energy control	34	AHS_OFF_dT	0~5	0	℃

Energy control	35	AHS_ON_Env.	-15~10	5	℃
Energy control	36	DHW_ON_MAX	10~600	90	Min
Energy control	37	AC_ON_MAX	10~600	30	Min
Project setting	6	PUMPd_RUN_t	5~120	5	Min
Project setting	7	PUMPd_DISINFECTION	[0]Disable; [1]Enable	Disable	/
Project setting	8	PUMPd_TIMER	[0]Disable; [1]Enable	Disable	/
Project setting	21	ZONE_B_HT_TD	[0] Radiator; [1] Fan coil unit; [2] Floor heating	Floor heating	/
Project setting	40	UNIT_MAX	1~8	1	/
Project setting	41	DHW_UNIT_NUM	1~8	1	/
Project setting	43	PUMPo_FUNCTION	[0]Zone A External Circulation Pump;[1]Zone A&B External Circulation Pump	Zone A External Circulation Pump	/
Project setting	46	BMS_DATA_FMT	[0]8,N,1;[1]8,N,2;[2]8,O,1;[3]8,E,1	8,N,1	/
Project setting	47	BMS_BAUDRATE	[0]2400;[1]4800;[2]9600;[3]19200;[4]38400;[5]57600	9600	/
Project setting	48	BMS_ADDR	1~247	1	/

iGXC13

Type	No.	Name	Range	Default	Unit
User parameter	1	CTRL_MODE	[1]Cooling;[2]Heating;[3]Auto	Heating	/
User parameter	2	COOL_TEMP_SET	-15~35	7	℃
User parameter	3	HEAT_TEMP_SET	0~105	55	℃
User parameter	4	HOT_WATER_TEMP_SET	0~100	60	℃
User parameter	5	COOL_ROOM_TEMP_SET	16~30	26	℃
User parameter	6	HEAT_ROOM_TEMP_SET	16~30	20	℃
User parameter	9	HEAT_TEMP_SET_B	0~105	60	℃
User parameter	10	HEAT_ROOM_TEMP_SET_B	16~30	26	℃
User parameter	11	POWER_MODE	[0]Standard;[1]Turbo;[2]Silent;[3]Auto	Standard	/
User parameter	13	TIMED_DISINFECTION_FUNCTION	[0]Disable;[1]Enable	Disable	/
User parameter	14	DISINFECTION_TEMP	60~70	65	℃
User parameter	15	DISINFECTION_CYCLE_MAX	90~300	210	Min
User parameter	16	DISINFECTION_HIGH_TEMP_TIME	5~60	15	Min
User parameter	26	Zone A Cool Curve	[0]Disable;[1]Low Temp. Curve1;[2]Low Temp. Curve2;[3]Low Temp. Curve3;[4]Low Temp. Curve4;[5]Low Temp. Curve5;[6]Low Temp. Curve6;[7]Low Temp. Curve7;[8]Low Temp. Curve8;[9]High Temp. Curve1;[10]High Temp. Curve2;[11]High Temp. Curve3;[12]High Temp. Curve4;[13]High Temp. Curve5;[14]High Temp. Curve6;[15]High Temp. Curve7;[16]High Temp. Curve8;[17]Curve9	Disable	/

User parameter	27	Zone A Heat Curve	[0]Disable;[1]Low Temp. Curve1;[2]Low Temp. Curve2;[3]Low Temp. Curve3;[4]Low Temp. Curve4;[5]Low Temp. Curve5;[6]Low Temp. Curve6;[7]Low Temp. Curve7;[8]Low Temp. Curve8;[9]High Temp. Curve1;[10]High Temp. Curve2;[11]High Temp. Curve3;[12]High Temp. Curve4;[13]High Temp. Curve5;[14]High Temp. Curve6;[15]High Temp. Curve7;[16]High Temp. Curve8;[17]Curve9	Disable	/
User parameter	29	Zone B Heat Curve	[0]Disable;[1]Low Temp. Curve1;[2]Low Temp. Curve2;[3]Low Temp. Curve3;[4]Low Temp. Curve4;[5]Low Temp. Curve5;[6]Low Temp. Curve6;[7]Low Temp. Curve7;[8]Low Temp. Curve8;[9]High Temp. Curve1;[10]High Temp. Curve2;[11]High Temp. Curve3;[12]High Temp. Curve4;[13]High Temp. Curve5;[14]High Temp. Curve6;[15]High Temp. Curve7;[16]High Temp. Curve8;[17]Curve9	Disable	/
User parameter	30	Curve#9_COOL _TA_1	-5~46	35	℃
User parameter	31	Curve#9_COOL _TA_2	-5~46	25	℃
User parameter	32	Curve#9_COOL _TWout2_1	5~25	10	℃
User parameter	33	Curve#9_COOL _TWout2_2	5~25	16	℃
User parameter	34	Curve#9_HEAT_ TA_1	-25~35	7	℃
User parameter	35	Curve#9_HEAT_ TA_2	-25~35	-5	℃
User parameter	36	Curve#9_HEAT_ TWout2_1	25~65	28	℃
User parameter	37	Curve#9_HEAT_ TWout2_2	25~65	35	℃
User parameter	38	00#UNIT	[0]Disable;[1]Enable	Enable	/
User parameter	39	01#UNIT	[0]Disable;[1]Enable	Enable	/
User parameter	40	02#UNIT	[0]Disable;[1]Enable	Enable	/
User parameter	41	03#UNIT	[0]Disable;[1]Enable	Enable	/

User parameter	42	04#UNIT	[0]Disable;[1]Enable	Enable	/
User parameter	43	05#UNIT	[0]Disable;[1]Enable	Enable	/
User parameter	44	06#UNIT	[0]Disable;[1]Enable	Enable	/
User parameter	45	07#UNIT	[0]Disable;[1]Enable	Enable	/
User parameter	46	LED Strip Switch	[0]Disable; [1]Enable	Disable	/
System parameter	5	WIRE_SW_TYPE	[0]Toggle Switch;[1]Pulse Switch	Toggle Switch	/
System parameter	7	POWER_DOWN_MEM	[0]Disable;[1]Enable	Enable	/
System parameter	8	POWER_ON_AUTO_RUN	[0]Disable;[1]Enable	Disable	/
System parameter	9	PUMPf_RUN_MODE	[0]Always;[1]Interval;[2]Save	Interval	/
System parameter	10	TEMP_CTRL_OBJ	[0]Inlet Temp.;[1]Outlet Temp.;[2]Buffer Tank Temp.	Buffer Tank Temp.	/
System parameter	11	COOL_TEMP_CORR	-10~10	0	℃
System parameter	12	HEAT_TEMP_CORR	-10~10	0	℃
System parameter	17	DHW_FUNCTION	[0]Disable;[1]Enable	Enable	/
System parameter	18	DHW_dT	0~20	5	℃
System parameter	19	CRANKCASE_HEATER_ON_TA	-10~20	12	℃
System parameter	20	CRANKCASE_HEATER_OFF_TA	-10~20	14	℃
System parameter	23	PWRD_TIME_MIN	0~48	4	h

System parameter	24	PWRD_TIME_MAX	0~96	48	h
System parameter	25	PREHT_TIME_MIN	0~999	10	Min
System parameter	26	PREHT_TIME_MAX	0~999	50	Min
System parameter	31	REMOTE_SW_TYPE	[0]Disable;[1]Linked Action Effective;[2]Linked Closed Effective;[3]Remote On/Off;[4]Remote Tank Heater;[5]Remote External Heat Source	Remote On/Off	/
System parameter	35	ZONE_CTRL	[0]One-zone Water Temp.;[1]One-zone Room Temp.;[2]Two-zone Water Temp.;[3]Two-zone(Water Temp.+ Room Temp.)	One-zone Water Temp.	/
System parameter	36	DHW_PUMPf_MODE	[0]Disable;[1]Always;[2]Interval;[3]Save	Disable	/
System parameter	37	TBH_RELAY_dT	0~20	0	℃
System parameter	38	BOTTOM HEATER_TYPE	[0]Defrosting Pan Heater;[1]Low AT Pan Heater	Defrosting Pan Heater	/
System parameter	39	BOTTOM HEATER_ON_TA	-50~50	7	℃
System parameter	42	SMART_GRID	[0]Disable;[1]Enable	Disable	/
System parameter	44	PUMPf_INTER_OFF_TIME	5~999	10	Min
System parameter	45	MODE_WIRE_CTRL	[0]Disable;[1]Enable	Disable	/
Switch & Sensor	1	DI_LDIlp	[0]Normally Open;[1]Normally Closed;[2]Disable	Normally Closed	/
Switch & Sensor	2	DI_LDIhp	[0]Normally Open;[1]Normally Closed;[2]Disable	Normally Closed	/
Switch & Sensor	3	OVERLOAD	[0]Normally Open;[1]Normally Closed;[2]Disable	Normally Closed	/
Switch & Sensor	4	DI_LDIw	[0]Normally Open;[1]Normally Closed;[2]Disable	Normally Closed	/
Switch & Sensor	5	DI_CUSTOM_FUN	[0]OFF;[1]RT_CTRL;[2]MODE_WIRE_CTRL	OFF	/

Switch & Sensor	20	TFLHin_SENSOR	[0]Disable;[1]Enable	Disable	/
Switch & Sensor	21	TWout3_SENSOR	[0]Disable;[1]Enable	Disable	/
Switch & Sensor	22	EVU_DI_TYPE	[0]Normally Open;[1]Normally Closed;[2]Disable	Normally Open	/
Switch & Sensor	23	SG_DI_TYPE	[0]Normally Open;[1]Normally Closed;[2]Disable	Normally Open	/
Switch & Sensor	33	TBT1_SENSOR	[0]Disable;[1]Enable	Enable	/
Switch & Sensor	34	TBT2_SENSOR	[0]Disable;[1]Enable	Disable	/
Switch & Sensor	38	IBH1 POWER	0~30000	0	/
Switch & Sensor	39	IBH2 POWER	0~30000	0	/
Switch & Sensor	40	IDLE POWER	0~30000	13	/
Switch & Sensor	41	OTHER RUN POWER	0~30000	0	/
Energy control	2	COOL_LOAD_dT	-20~20	2	℃
Energy control	3	COOL_UNLOAD_dT	-20~20	2	℃
Energy control	4	HEAT_LOAD_dT	-20~20	4	℃
Energy control	5	HEAT_UNLOAD_dT	-20~20	2	℃
Energy control	6	ROOM_TEMP_dT	1~10	4	℃
Energy control	7	CL_SET_T_MIN	-10~35	1	/
Energy control	8	CL_SET_T_MAX	-10~35	26	℃

Energy control	9	HT_SET_T_MIN	0~100	28	℃
Energy control	10	HT_SET_T_MAX	0~100	75	℃
Energy control	17	AUTO_CL_TA_MIN	20~29	25	℃
Energy control	18	AUTO_HT_TA_MAX	10~17	17	℃
Energy control	22	IBH FUNCTION	[0]Disable; [1]Only heating; [2]Only hot water; [3]Heating & Hot water	Heating & Hot Water	/
Energy control	23	AHS FUNCTION	[0]Disable; [1]Only heating; [2]Only hot water; [3]Heating & Hot water	Disable	/
Energy control	24	IBH_ON_HI_dT	0~10	5	℃
Energy control	25	IBH_ON_LO_dT	0~10	2	℃
Energy control	26	IBH_GEAR	1~3	1	/
Energy control	27	IBH_ON_DLY	15~120	30	℃
Energy control	28	IBH_ON_TA	-15~10	-5	℃
Energy control	29	IBH_ON_dT	2~10	5	℃
Energy control	30	TBH_ON_DLY	60~240	90	℃
Energy control	31	TBH_ON_TA	-50~30	5	℃
Energy control	32	AHS_ON_DLY	15~120	30	℃
Energy control	33	AHS_ON_dT	2~10	5	℃
Energy control	34	AHS_OFF_dT	0~5	0	℃

Energy control	35	AHS_ON_Env.	-15~10	5	℃
Energy control	36	DHW_ON_MAX	10~600	90	Min
Energy control	37	AC_ON_MAX	10~600	30	Min
Project setting	6	PUMPd_RUN_t	5~120	5	Min
Project setting	7	PUMPd_DISINFECTION	[0]Disable; [1]Enable	Disable	/
Project setting	8	PUMPd_TIMER	[0]Disable; [1]Enable	Disable	/
Project setting	21	ZONE_B_HT_TD	[0] Radiator; [1] Fan coil unit; [2] Floor heating	Floor heating	/
Project setting	40	UNIT_MAX	1~8	1	/
Project setting	41	DHW_UNIT_NUM	1~8	1	/
Project setting	43	PUMPo_FUNCTION	[0]Zone A External Circulation Pump;[1]Zone A&B External Circulation Pump	Zone A External Circulation Pump	/
Project setting	46	BMS_DATA_FMT	[0]8,N,1;[1]8,N,2;[2]8,O,1;[3]8,E,1	8,N,1	/
Project setting	47	BMS_BAUDRATE	[0]2400;[1]4800;[2]9600;[3]19200;[4]38400;[5]57600	9600	/
Project setting	48	BMS_ADDR	1~247	1	/

iGXC13T

Type	No.	Name	Range	Default	Unit
User parameter	1	CTRL_MODE	[1]Cooling;[2]Heating;[3]Auto	Heating	/
User parameter	2	COOL_TEMP_SET	-15~35	7	℃
User parameter	3	HEAT_TEMP_SET	0~105	55	℃
User parameter	4	HOT_WATER_TEMP_SET	0~100	60	℃
User parameter	5	COOL_ROOM_TEMP_SET	16~30	26	℃
User parameter	6	HEAT_ROOM_TEMP_SET	16~30	20	℃
User parameter	9	HEAT_TEMP_SET_B	0~105	60	℃
User parameter	10	HEAT_ROOM_TEMP_SET_B	16~30	26	℃
User parameter	11	POWER_MODE	[0]Standard;[1]Turbo;[2]Silent;[3]Auto	Standard	/
User parameter	13	TIMED_DISINFECTION_FUNCTION	[0]Disable;[1]Enable	Disable	/
User parameter	14	DISINFECTION_TEMP	60~70	65	℃
User parameter	15	DISINFECTION_CYCLE_MAX	90~300	210	Min
User parameter	16	DISINFECTION_HIGH_TEMP_TIME	5~60	15	Min
User parameter	26	Zone A Cool Curve	[0]Disable;[1]Low Temp. Curve1;[2]Low Temp. Curve2;[3]Low Temp. Curve3;[4]Low Temp. Curve4;[5]Low Temp. Curve5;[6]Low Temp. Curve6;[7]Low Temp. Curve7;[8]Low Temp. Curve8;[9]High Temp. Curve1;[10]High Temp. Curve2;[11]High Temp. Curve3;[12]High Temp. Curve4;[13]High Temp. Curve5;[14]High Temp. Curve6;[15]High Temp. Curve7;[16]High Temp. Curve8;[17]Curve9	Disable	/

User parameter	27	Zone A Heat Curve	[0]Disable;[1]Low Temp. Curve1;[2]Low Temp. Curve2;[3]Low Temp. Curve3;[4]Low Temp. Curve4;[5]Low Temp. Curve5;[6]Low Temp. Curve6;[7]Low Temp. Curve7;[8]Low Temp. Curve8;[9]High Temp. Curve1;[10]High Temp. Curve2;[11]High Temp. Curve3;[12]High Temp. Curve4;[13]High Temp. Curve5;[14]High Temp. Curve6;[15]High Temp. Curve7;[16]High Temp. Curve8;[17]Curve9	Disable	/
User parameter	29	Zone B Heat Curve	[0]Disable;[1]Low Temp. Curve1;[2]Low Temp. Curve2;[3]Low Temp. Curve3;[4]Low Temp. Curve4;[5]Low Temp. Curve5;[6]Low Temp. Curve6;[7]Low Temp. Curve7;[8]Low Temp. Curve8;[9]High Temp. Curve1;[10]High Temp. Curve2;[11]High Temp. Curve3;[12]High Temp. Curve4;[13]High Temp. Curve5;[14]High Temp. Curve6;[15]High Temp. Curve7;[16]High Temp. Curve8;[17]Curve9	Disable	/
User parameter	30	Curve#9_COOL _TA_1	-5~46	35	℃
User parameter	31	Curve#9_COOL _TA_2	-5~46	25	℃
User parameter	32	Curve#9_COOL _TWout2_1	5~25	10	℃
User parameter	33	Curve#9_COOL _TWout2_2	5~25	16	℃
User parameter	34	Curve#9_HEAT_ TA_1	-25~35	7	℃
User parameter	35	Curve#9_HEAT_ TA_2	-25~35	-5	℃
User parameter	36	Curve#9_HEAT_ TWout2_1	25~65	28	℃
User parameter	37	Curve#9_HEAT_ TWout2_2	25~65	35	℃
User parameter	38	00#UNIT	[0]Disable;[1]Enable	Enable	/
User parameter	39	01#UNIT	[0]Disable;[1]Enable	Enable	/
User parameter	40	02#UNIT	[0]Disable;[1]Enable	Enable	/
User parameter	41	03#UNIT	[0]Disable;[1]Enable	Enable	/

User parameter	42	04#UNIT	[0]Disable;[1]Enable	Enable	/
User parameter	43	05#UNIT	[0]Disable;[1]Enable	Enable	/
User parameter	44	06#UNIT	[0]Disable;[1]Enable	Enable	/
User parameter	45	07#UNIT	[0]Disable;[1]Enable	Enable	/
User parameter	46	LED Strip Switch	[0]Disable; [1]Enable	Disable	/
System parameter	5	WIRE_SW_TYPE	[0]Toggle Switch;[1]Pulse Switch	Toggle Switch	/
System parameter	7	POWER_DOWN_MEM	[0]Disable;[1]Enable	Enable	/
System parameter	8	POWER_ON_AUTO_RUN	[0]Disable;[1]Enable	Disable	/
System parameter	9	PUMPf_RUN_MODE	[0]Always;[1]Interval;[2]Save	Interval	/
System parameter	10	TEMP_CTRL_OBJ	[0]Inlet Temp.;[1]Outlet Temp.;[2]Buffer Tank Temp.	Buffer Tank Temp.	/
System parameter	11	COOL_TEMP_CORR	-10~10	0	℃
System parameter	12	HEAT_TEMP_CORR	-10~10	0	℃
System parameter	17	DHW_FUNCTION	[0]Disable;[1]Enable	Enable	/
System parameter	18	DHW_dT	0~20	5	℃
System parameter	19	CRANKCASE_HEATER_ON_TA	-10~20	12	℃
System parameter	20	CRANKCASE_HEATER_OFF_TA	-10~20	14	℃
System parameter	23	PWRD_TIME_MIN	0~48	4	h

System parameter	24	PWRD_TIME_MAX	0~96	48	h
System parameter	25	PREHT_TIME_MIN	0~999	10	Min
System parameter	26	PREHT_TIME_MAX	0~999	50	Min
System parameter	31	REMOTE_SW_TYPE	[0]Disable;[1]Linked Action Effective;[2]Linked Closed Effective;[3]Remote On/Off;[4]Remote Tank Heater;[5]Remote External Heat Source	Remote On/Off	/
System parameter	35	ZONE_CTRL	[0]One-zone Water Temp.;[1]One-zone Room Temp.;[2]Two-zone Water Temp.;[3]Two-zone(Water Temp.+ Room Temp.)	One-zone Water Temp.	/
System parameter	36	DHW_PUMPf_MODE	[0]Disable;[1]Always;[2]Interval;[3]Save	Disable	/
System parameter	37	TBH_RELAY_dT	0~20	0	℃
System parameter	38	BOTTOM HEATER_TYPE	[0]Defrosting Pan Heater;[1]Low AT Pan Heater	Defrosting Pan Heater	/
System parameter	39	BOTTOM HEATER_ON_TA	-50~50	7	℃
System parameter	42	SMART_GRID	[0]Disable;[1]Enable	Disable	/
System parameter	44	PUMPf_INTER_OFF_TIME	5~999	10	Min
System parameter	45	MODE_WIRE_CTRL	[0]Disable;[1]Enable	Disable	/
Switch & Sensor	1	DI_LDIlp	[0]Normally Open;[1]Normally Closed;[2]Disable	Normally Closed	/
Switch & Sensor	2	DI_LDIhp	[0]Normally Open;[1]Normally Closed;[2]Disable	Normally Closed	/
Switch & Sensor	3	OVERLOAD	[0]Normally Open;[1]Normally Closed;[2]Disable	Normally Closed	/
Switch & Sensor	4	DI_LDIw	[0]Normally Open;[1]Normally Closed;[2]Disable	Normally Closed	/
Switch & Sensor	5	DI_CUSTOM_FUN	[0]OFF;[1]RT_CTRL;[2]MODE_WIRE_CTRL	OFF	/

Switch & Sensor	20	TFLHin_SENSOR	[0]Disable;[1]Enable	Disable	/
Switch & Sensor	21	TWout3_SENSOR	[0]Disable;[1]Enable	Disable	/
Switch & Sensor	22	EVU_DI_TYPE	[0]Normally Open;[1]Normally Closed;[2]Disable	Normally Open	/
Switch & Sensor	23	SG_DI_TYPE	[0]Normally Open;[1]Normally Closed;[2]Disable	Normally Open	/
Switch & Sensor	33	TBT1_SENSOR	[0]Disable;[1]Enable	Enable	/
Switch & Sensor	34	TBT2_SENSOR	[0]Disable;[1]Enable	Disable	/
Switch & Sensor	38	IBH1 POWER	0~30000	0	/
Switch & Sensor	39	IBH2 POWER	0~30000	0	/
Switch & Sensor	40	IDLE POWER	0~30000	15	/
Switch & Sensor	41	OTHER RUN POWER	0~30000	0	/
Energy control	2	COOL_LOAD_dT	-20~20	2	℃
Energy control	3	COOL_UNLOAD_dT	-20~20	2	℃
Energy control	4	HEAT_LOAD_dT	-20~20	4	℃
Energy control	5	HEAT_UNLOAD_dT	-20~20	2	℃
Energy control	6	ROOM_TEMP_dT	1~10	4	℃
Energy control	7	CL_SET_T_MIN	-10~35	1	/
Energy control	8	CL_SET_T_MAX	-10~35	26	℃

Energy control	9	HT_SET_T_MIN	0~100	28	℃
Energy control	10	HT_SET_T_MAX	0~100	75	℃
Energy control	17	AUTO_CL_TA_MIN	20~29	25	℃
Energy control	18	AUTO_HT_TA_MAX	10~17	17	℃
Energy control	22	IBH FUNCTION	[0]Disable; [1]Only heating; [2]Only hot water; [3]Heating & Hot water	Heating & Hot Water	/
Energy control	23	AHS FUNCTION	[0]Disable; [1]Only heating; [2]Only hot water; [3]Heating & Hot water	Disable	/
Energy control	24	IBH_ON_HI_dT	0~10	5	℃
Energy control	25	IBH_ON_LO_dT	0~10	2	℃
Energy control	26	IBH_GEAR	1~3	1	/
Energy control	27	IBH_ON_DLY	15~120	30	℃
Energy control	28	IBH_ON_TA	-15~10	-5	℃
Energy control	29	IBH_ON_dT	2~10	5	℃
Energy control	30	TBH_ON_DLY	60~240	90	℃
Energy control	31	TBH_ON_TA	-50~30	5	℃
Energy control	32	AHS_ON_DLY	15~120	30	℃
Energy control	33	AHS_ON_dT	2~10	5	℃
Energy control	34	AHS_OFF_dT	0~5	0	℃

Energy control	35	AHS_ON_Env.	-15~10	5	℃
Energy control	36	DHW_ON_MAX	10~600	90	Min
Energy control	37	AC_ON_MAX	10~600	30	Min
Project setting	6	PUMPd_RUN_t	5~120	5	Min
Project setting	7	PUMPd_DISINFECTION	[0]Disable; [1]Enable	Disable	/
Project setting	8	PUMPd_TIMER	[0]Disable; [1]Enable	Disable	/
Project setting	21	ZONE_B_HT_TD	[0] Radiator; [1] Fan coil unit; [2] Floor heating	Floor heating	/
Project setting	40	UNIT_MAX	1~8	1	/
Project setting	41	DHW_UNIT_NUM	1~8	1	/
Project setting	43	PUMPo_FUNCTION	[0]Zone A External Circulation Pump;[1]Zone A&B External Circulation Pump	Zone A External Circulation Pump	/
Project setting	46	BMS_DATA_FMT	[0]8,N,1;[1]8,N,2;[2]8,O,1;[3]8,E,1	8,N,1	/
Project setting	47	BMS_BAUDRATE	[0]2400;[1]4800;[2]9600;[3]19200;[4]38400;[5]57600	9600	/
Project setting	48	BMS_ADDR	1~247	1	/

Type	No.	Name	Range	Default	Unit
User parameter	1	CTRL_MODE	[1]Cooling;[2]Heating;[3]Auto	Heating	/
User parameter	2	COOL_TEMP_SET	-15~35	7	℃
User parameter	3	HEAT_TEMP_SET	0~105	55	℃
User parameter	4	HOT_WATER_TEMP_SET	0~100	60	℃
User parameter	5	COOL_ROOM_TEMP_SET	16~30	26	℃
User parameter	6	HEAT_ROOM_TEMP_SET	16~30	20	℃
User parameter	9	HEAT_TEMP_SET_B	0~105	60	℃
User parameter	10	HEAT_ROOM_TEMP_SET_B	16~30	26	℃
User parameter	11	POWER_MODE	[0]Standard;[1]Turbo;[2]Silent;[3]Auto	Standard	/
User parameter	13	TIMED_DISINFECTION_FUNCTION	[0]Disable;[1]Enable	Disable	/
User parameter	14	DISINFECTION_TEMP	60~70	65	℃
User parameter	15	DISINFECTION_CYCLE_MAX	90~300	210	Min
User parameter	16	DISINFECTION_HIGH_TEMP_TIME	5~60	15	Min
User parameter	26	Zone A Cool Curve	[0]Disable;[1]Low Temp. Curve1;[2]Low Temp. Curve2;[3]Low Temp. Curve3;[4]Low Temp. Curve4;[5]Low Temp. Curve5;[6]Low Temp. Curve6;[7]Low Temp. Curve7;[8]Low Temp. Curve8;[9]High Temp. Curve1;[10]High Temp. Curve2;[11]High Temp. Curve3;[12]High Temp. Curve4;[13]High Temp. Curve5;[14]High Temp. Curve6;[15]High Temp. Curve7;[16]High Temp. Curve8;[17]Curve9	Disable	/

User parameter	27	Zone A Heat Curve	[0]Disable;[1]Low Temp. Curve1;[2]Low Temp. Curve2;[3]Low Temp. Curve3;[4]Low Temp. Curve4;[5]Low Temp. Curve5;[6]Low Temp. Curve6;[7]Low Temp. Curve7;[8]Low Temp. Curve8;[9]High Temp. Curve1;[10]High Temp. Curve2;[11]High Temp. Curve3;[12]High Temp. Curve4;[13]High Temp. Curve5;[14]High Temp. Curve6;[15]High Temp. Curve7;[16]High Temp. Curve8;[17]Curve9	Disable	/
User parameter	29	Zone B Heat Curve	[0]Disable;[1]Low Temp. Curve1;[2]Low Temp. Curve2;[3]Low Temp. Curve3;[4]Low Temp. Curve4;[5]Low Temp. Curve5;[6]Low Temp. Curve6;[7]Low Temp. Curve7;[8]Low Temp. Curve8;[9]High Temp. Curve1;[10]High Temp. Curve2;[11]High Temp. Curve3;[12]High Temp. Curve4;[13]High Temp. Curve5;[14]High Temp. Curve6;[15]High Temp. Curve7;[16]High Temp. Curve8;[17]Curve9	Disable	/
User parameter	30	Curve#9_COOL _TA_1	-5~46	35	℃
User parameter	31	Curve#9_COOL _TA_2	-5~46	25	℃
User parameter	32	Curve#9_COOL _TWout2_1	5~25	10	℃
User parameter	33	Curve#9_COOL _TWout2_2	5~25	16	℃
User parameter	34	Curve#9_HEAT_ TA_1	-25~35	7	℃
User parameter	35	Curve#9_HEAT_ TA_2	-25~35	-5	℃
User parameter	36	Curve#9_HEAT_ TWout2_1	25~65	28	℃
User parameter	37	Curve#9_HEAT_ TWout2_2	25~65	35	℃
User parameter	38	00#UNIT	[0]Disable;[1]Enable	Enable	/
User parameter	39	01#UNIT	[0]Disable;[1]Enable	Enable	/
User parameter	40	02#UNIT	[0]Disable;[1]Enable	Enable	/
User parameter	41	03#UNIT	[0]Disable;[1]Enable	Enable	/

User parameter	42	04#UNIT	[0]Disable;[1]Enable	Enable	/
User parameter	43	05#UNIT	[0]Disable;[1]Enable	Enable	/
User parameter	44	06#UNIT	[0]Disable;[1]Enable	Enable	/
User parameter	45	07#UNIT	[0]Disable;[1]Enable	Enable	/
User parameter	46	LED Strip Switch	[0]Disable; [1]Enable	Disable	/
System parameter	5	WIRE_SW_TYPE	[0]Toggle Switch;[1]Pulse Switch	Toggle Switch	/
System parameter	7	POWER_DOWN_MEM	[0]Disable;[1]Enable	Enable	/
System parameter	8	POWER_ON_AUTO_RUN	[0]Disable;[1]Enable	Disable	/
System parameter	9	PUMPf_RUN_MODE	[0]Always;[1]Interval;[2]Save	Interval	/
System parameter	10	TEMP_CTRL_OBJ	[0]Inlet Temp.;[1]Outlet Temp.;[2]Buffer Tank Temp.	Buffer Tank Temp.	/
System parameter	11	COOL_TEMP_CORR	-10~10	0	℃
System parameter	12	HEAT_TEMP_CORR	-10~10	0	℃
System parameter	17	DHW_FUNCTION	[0]Disable;[1]Enable	Enable	/
System parameter	18	DHW_dT	0~20	5	℃
System parameter	19	CRANKCASE_HEATER_ON_TA	-10~20	12	℃
System parameter	20	CRANKCASE_HEATER_OFF_TA	-10~20	14	℃
System parameter	23	PWRD_TIME_MIN	0~48	4	h

System parameter	24	PWRD_TIME_MAX	0~96	48	h
System parameter	25	PREHT_TIME_MIN	0~999	10	Min
System parameter	26	PREHT_TIME_MAX	0~999	50	Min
System parameter	31	REMOTE_SW_TYPE	[0]Disable;[1]Linked Action Effective;[2]Linked Closed Effective;[3]Remote On/Off;[4]Remote Tank Heater;[5]Remote External Heat Source	Remote On/Off	/
System parameter	35	ZONE_CTRL	[0]One-zone Water Temp.;[1]One-zone Room Temp.;[2]Two-zone Water Temp.;[3]Two-zone(Water Temp.+ Room Temp.)	One-zone Water Temp.	/
System parameter	36	DHW_PUMPf_MODE	[0]Disable;[1]Always;[2]Interval;[3]Save	Disable	/
System parameter	37	TBH_RELAY_dT	0~20	0	℃
System parameter	38	BOTTOM HEATER_TYPE	[0]Defrosting Pan Heater;[1]Low AT Pan Heater	Defrosting Pan Heater	/
System parameter	39	BOTTOM HEATER_ON_TA	-50~50	7	℃
System parameter	42	SMART_GRID	[0]Disable;[1]Enable	Disable	/
System parameter	44	PUMPf_INTER_OFF_TIME	5~999	10	Min
System parameter	45	MODE_WIRE_CTRL	[0]Disable;[1]Enable	Disable	/
Switch & Sensor	1	DI_LDIlp	[0]Normally Open;[1]Normally Closed;[2]Disable	Normally Closed	/
Switch & Sensor	2	DI_LDIhp	[0]Normally Open;[1]Normally Closed;[2]Disable	Normally Closed	/
Switch & Sensor	3	OVERLOAD	[0]Normally Open;[1]Normally Closed;[2]Disable	Normally Closed	/
Switch & Sensor	4	DI_LDIw	[0]Normally Open;[1]Normally Closed;[2]Disable	Normally Closed	/
Switch & Sensor	5	DI_CUSTOM_FUN	[0]OFF;[1]RT_CTRL;[2]MODE_WIRE_CTRL	OFF	/

Switch & Sensor	20	TFLHin_SENSOR	[0]Disable;[1]Enable	Disable	/
Switch & Sensor	21	TWout3_SENSOR	[0]Disable;[1]Enable	Disable	/
Switch & Sensor	22	EVU_DI_TYPE	[0]Normally Open;[1]Normally Closed;[2]Disable	Normally Open	/
Switch & Sensor	23	SG_DI_TYPE	[0]Normally Open;[1]Normally Closed;[2]Disable	Normally Open	/
Switch & Sensor	33	TBT1_SENSOR	[0]Disable;[1]Enable	Enable	/
Switch & Sensor	34	TBT2_SENSOR	[0]Disable;[1]Enable	Disable	/
Switch & Sensor	38	IBH1 POWER	0~30000	0	/
Switch & Sensor	39	IBH2 POWER	0~30000	0	/
Switch & Sensor	40	IDLE POWER	0~30000	17	/
Switch & Sensor	41	OTHER RUN POWER	0~30000	0	/
Energy control	2	COOL_LOAD_dT	-20~20	2	℃
Energy control	3	COOL_UNLOAD_dT	-20~20	2	℃
Energy control	4	HEAT_LOAD_dT	-20~20	4	℃
Energy control	5	HEAT_UNLOAD_dT	-20~20	2	℃
Energy control	6	ROOM_TEMP_dT	1~10	4	℃
Energy control	7	CL_SET_T_MIN	-10~35	1	/
Energy control	8	CL_SET_T_MAX	-10~35	26	℃

Energy control	9	HT_SET_T_MIN	0~100	28	℃
Energy control	10	HT_SET_T_MAX	0~100	75	℃
Energy control	17	AUTO_CL_TA_MIN	20~29	25	℃
Energy control	18	AUTO_HT_TA_MAX	10~17	17	℃
Energy control	22	IBH FUNCTION	[0]Disable; [1]Only heating; [2]Only hot water; [3]Heating & Hot water	Heating & Hot Water	/
Energy control	23	AHS FUNCTION	[0]Disable; [1]Only heating; [2]Only hot water; [3]Heating & Hot water	Disable	/
Energy control	24	IBH_ON_HI_dT	0~10	5	℃
Energy control	25	IBH_ON_LO_dT	0~10	2	℃
Energy control	26	IBH_GEAR	1~3	1	/
Energy control	27	IBH_ON_DLY	15~120	30	℃
Energy control	28	IBH_ON_TA	-15~10	-5	℃
Energy control	29	IBH_ON_dT	2~10	5	℃
Energy control	30	TBH_ON_DLY	60~240	90	℃
Energy control	31	TBH_ON_TA	-50~30	5	℃
Energy control	32	AHS_ON_DLY	15~120	30	℃
Energy control	33	AHS_ON_dT	2~10	5	℃
Energy control	34	AHS_OFF_dT	0~5	0	℃

Energy control	35	AHS_ON_Env.	-15~10	5	℃
Energy control	36	DHW_ON_MAX	10~600	90	Min
Energy control	37	AC_ON_MAX	10~600	30	Min
Project setting	6	PUMPd_RUN_t	5~120	5	Min
Project setting	7	PUMPd_DISINFECTION	[0]Disable; [1]Enable	Disable	/
Project setting	8	PUMPd_TIMER	[0]Disable; [1]Enable	Disable	/
Project setting	21	ZONE_B_HT_TD	[0] Radiator; [1] Fan coil unit; [2] Floor heating	Floor heating	/
Project setting	40	UNIT_MAX	1~8	1	/
Project setting	41	DHW_UNIT_NUM	1~8	1	/
Project setting	43	PUMPo_FUNCTION	[0]Zone A External Circulation Pump;[1]Zone A&B External Circulation Pump	Zone A External Circulation Pump	/
Project setting	46	BMS_DATA_FMT	[0]8,N,1;[1]8,N,2;[2]8,O,1;[3]8,E,1	8,N,1	/
Project setting	47	BMS_BAUDRATE	[0]2400;[1]4800;[2]9600;[3]19200;[4]38400;[5]57600	9600	/
Project setting	48	BMS_ADDR	1~247	1	/

iGXC16T

Type	No.	Name	Range	Default	Unit
User parameter	1	CTRL_MODE	[1]Cooling;[2]Heating;[3]Auto	Heating	/
User parameter	2	COOL_TEMP_SET	-15~35	7	℃
User parameter	3	HEAT_TEMP_SET	0~105	55	℃
User parameter	4	HOT_WATER_TEMP_SET	0~100	60	℃
User parameter	5	COOL_ROOM_TEMP_SET	16~30	26	℃
User parameter	6	HEAT_ROOM_TEMP_SET	16~30	20	℃
User parameter	9	HEAT_TEMP_SET_B	0~105	60	℃
User parameter	10	HEAT_ROOM_TEMP_SET_B	16~30	26	℃
User parameter	11	POWER_MODE	[0]Standard;[1]Turbo;[2]Silent;[3]Auto	Standard	/
User parameter	13	TIMED_DISINFECTION_FUNCTION	[0]Disable;[1]Enable	Disable	/
User parameter	14	DISINFECTION_TEMP	60~70	65	℃
User parameter	15	DISINFECTION_CYCLE_MAX	90~300	210	Min
User parameter	16	DISINFECTION_HIGH_TEMP_TIME	5~60	15	Min
User parameter	26	Zone A Cool Curve	[0]Disable;[1]Low Temp. Curve1;[2]Low Temp. Curve2;[3]Low Temp. Curve3;[4]Low Temp. Curve4;[5]Low Temp. Curve5;[6]Low Temp. Curve6;[7]Low Temp. Curve7;[8]Low Temp. Curve8;[9]High Temp. Curve1;[10]High Temp. Curve2;[11]High Temp. Curve3;[12]High Temp. Curve4;[13]High Temp. Curve5;[14]High Temp. Curve6;[15]High Temp. Curve7;[16]High Temp. Curve8;[17]Curve9	Disable	/

User parameter	27	Zone A Heat Curve	[0]Disable;[1]Low Temp. Curve1;[2]Low Temp. Curve2;[3]Low Temp. Curve3;[4]Low Temp. Curve4;[5]Low Temp. Curve5;[6]Low Temp. Curve6;[7]Low Temp. Curve7;[8]Low Temp. Curve8;[9]High Temp. Curve1;[10]High Temp. Curve2;[11]High Temp. Curve3;[12]High Temp. Curve4;[13]High Temp. Curve5;[14]High Temp. Curve6;[15]High Temp. Curve7;[16]High Temp. Curve8;[17]Curve9	Disable	/
User parameter	29	Zone B Heat Curve	[0]Disable;[1]Low Temp. Curve1;[2]Low Temp. Curve2;[3]Low Temp. Curve3;[4]Low Temp. Curve4;[5]Low Temp. Curve5;[6]Low Temp. Curve6;[7]Low Temp. Curve7;[8]Low Temp. Curve8;[9]High Temp. Curve1;[10]High Temp. Curve2;[11]High Temp. Curve3;[12]High Temp. Curve4;[13]High Temp. Curve5;[14]High Temp. Curve6;[15]High Temp. Curve7;[16]High Temp. Curve8;[17]Curve9	Disable	/
User parameter	30	Curve#9_COOL_TA_1	-5~46	35	℃
User parameter	31	Curve#9_COOL_TA_2	-5~46	25	℃
User parameter	32	Curve#9_COOL_TWout2_1	5~25	10	℃
User parameter	33	Curve#9_COOL_TWout2_2	5~25	16	℃
User parameter	34	Curve#9_HEAT_TA_1	-25~35	7	℃
User parameter	35	Curve#9_HEAT_TA_2	-25~35	-5	℃
User parameter	36	Curve#9_HEAT_TWout2_1	25~65	28	℃
User parameter	37	Curve#9_HEAT_TWout2_2	25~65	35	℃
User parameter	38	00#UNIT	[0]Disable;[1]Enable	Enable	/
User parameter	39	01#UNIT	[0]Disable;[1]Enable	Enable	/
User parameter	40	02#UNIT	[0]Disable;[1]Enable	Enable	/
User parameter	41	03#UNIT	[0]Disable;[1]Enable	Enable	/

User parameter	42	04#UNIT	[0]Disable;[1]Enable	Enable	/
User parameter	43	05#UNIT	[0]Disable;[1]Enable	Enable	/
User parameter	44	06#UNIT	[0]Disable;[1]Enable	Enable	/
User parameter	45	07#UNIT	[0]Disable;[1]Enable	Enable	/
User parameter	46	LED Strip Switch	[0]Disable; [1]Enable	Disable	/
System parameter	5	WIRE_SW_TYPE	[0]Toggle Switch;[1]Pulse Switch	Toggle Switch	/
System parameter	7	POWER_DOWN_MEM	[0]Disable;[1]Enable	Enable	/
System parameter	8	POWER_ON_AUTO_RUN	[0]Disable;[1]Enable	Disable	/
System parameter	9	PUMPf_RUN_MODE	[0]Always;[1]Interval;[2]Save	Interval	/
System parameter	10	TEMP_CTRL_OBJ	[0]Inlet Temp.;[1]Outlet Temp.;[2]Buffer Tank Temp.	Buffer Tank Temp.	/
System parameter	11	COOL_TEMP_CORR	-10~10	0	℃
System parameter	12	HEAT_TEMP_CORR	-10~10	0	℃
System parameter	17	DHW_FUNCTION	[0]Disable;[1]Enable	Enable	/
System parameter	18	DHW_dT	0~20	5	℃
System parameter	19	CRANKCASE_HEATER_ON_TA	-10~20	12	℃
System parameter	20	CRANKCASE_HEATER_OFF_TA	-10~20	14	℃
System parameter	23	PWRD_TIME_MIN	0~48	4	h

System parameter	24	PWRD_TIME_MAX	0~96	48	h
System parameter	25	PREHT_TIME_MIN	0~999	10	Min
System parameter	26	PREHT_TIME_MAX	0~999	50	Min
System parameter	31	REMOTE_SW_TYPE	[0]Disable;[1]Linked Action Effective;[2]Linked Closed Effective;[3]Remote On/Off;[4]Remote Tank Heater;[5]Remote External Heat Source	Remote On/Off	/
System parameter	35	ZONE_CTRL	[0]One-zone Water Temp.;[1]One-zone Room Temp.;[2]Two-zone Water Temp.;[3]Two-zone(Water Temp.+ Room Temp.)	One-zone Water Temp.	/
System parameter	36	DHW_PUMPf_MODE	[0]Disable;[1]Always;[2]Interval;[3]Save	Disable	/
System parameter	37	TBH_RELAY_dT	0~20	0	℃
System parameter	38	BOTTOM HEATER_TYPE	[0]Defrosting Pan Heater;[1]Low AT Pan Heater	Defrosting Pan Heater	/
System parameter	39	BOTTOM HEATER_ON_TA	-50~50	7	℃
System parameter	42	SMART_GRID	[0]Disable;[1]Enable	Disable	/
System parameter	44	PUMPf_INTER_OFF_TIME	5~999	10	Min
System parameter	45	MODE_WIRE_CTRL	[0]Disable;[1]Enable	Disable	/
Switch & Sensor	1	DI_LDIlp	[0]Normally Open;[1]Normally Closed;[2]Disable	Normally Closed	/
Switch & Sensor	2	DI_LDIhp	[0]Normally Open;[1]Normally Closed;[2]Disable	Normally Closed	/
Switch & Sensor	3	OVERLOAD	[0]Normally Open;[1]Normally Closed;[2]Disable	Normally Closed	/
Switch & Sensor	4	DI_LDIw	[0]Normally Open;[1]Normally Closed;[2]Disable	Normally Closed	/
Switch & Sensor	5	DI_CUSTOM_FUN	[0]OFF;[1]RT_CTRL;[2]MODE_WIRE_CTRL	OFF	/

Switch & Sensor	20	TFLHin_SENSOR	[0]Disable;[1]Enable	Disable	/
Switch & Sensor	21	TWout3_SENSOR	[0]Disable;[1]Enable	Disable	/
Switch & Sensor	22	EVU_DI_TYPE	[0]Normally Open;[1]Normally Closed;[2]Disable	Normally Open	/
Switch & Sensor	23	SG_DI_TYPE	[0]Normally Open;[1]Normally Closed;[2]Disable	Normally Open	/
Switch & Sensor	33	TBT1_SENSOR	[0]Disable;[1]Enable	Enable	/
Switch & Sensor	34	TBT2_SENSOR	[0]Disable;[1]Enable	Disable	/
Switch & Sensor	38	IBH1 POWER	0~30000	0	/
Switch & Sensor	39	IBH2 POWER	0~30000	0	/
Switch & Sensor	40	IDLE POWER	0~30000	19	/
Switch & Sensor	41	OTHER RUN POWER	0~30000	0	/
Energy control	2	COOL_LOAD_dT	-20~20	2	℃
Energy control	3	COOL_UNLOAD_dT	-20~20	2	℃
Energy control	4	HEAT_LOAD_dT	-20~20	4	℃
Energy control	5	HEAT_UNLOAD_dT	-20~20	2	℃
Energy control	6	ROOM_TEMP_dT	1~10	4	℃
Energy control	7	CL_SET_T_MIN	-10~35	1	/
Energy control	8	CL_SET_T_MAX	-10~35	26	℃

Energy control	9	HT_SET_T_MIN	0~100	28	℃
Energy control	10	HT_SET_T_MAX	0~100	75	℃
Energy control	17	AUTO_CL_TA_MIN	20~29	25	℃
Energy control	18	AUTO_HT_TA_MAX	10~17	17	℃
Energy control	22	IBH FUNCTION	[0]Disable; [1]Only heating; [2]Only hot water; [3]Heating & Hot water	Heating & Hot Water	/
Energy control	23	AHS FUNCTION	[0]Disable; [1]Only heating; [2]Only hot water; [3]Heating & Hot water	Disable	/
Energy control	24	IBH_ON_HI_dT	0~10	5	℃
Energy control	25	IBH_ON_LO_dT	0~10	2	℃
Energy control	26	IBH_GEAR	1~3	1	/
Energy control	27	IBH_ON_DLY	15~120	30	℃
Energy control	28	IBH_ON_TA	-15~10	-5	℃
Energy control	29	IBH_ON_dT	2~10	5	℃
Energy control	30	TBH_ON_DLY	60~240	90	℃
Energy control	31	TBH_ON_TA	-50~30	5	℃
Energy control	32	AHS_ON_DLY	15~120	30	℃
Energy control	33	AHS_ON_dT	2~10	5	℃
Energy control	34	AHS_OFF_dT	0~5	0	℃

Energy control	35	AHS_ON_Env.	-15~10	5	℃
Energy control	36	DHW_ON_MAX	10~600	90	Min
Energy control	37	AC_ON_MAX	10~600	30	Min
Project setting	6	PUMPd_RUN_t	5~120	5	Min
Project setting	7	PUMPd_DISINFECTION	[0]Disable; [1]Enable	Disable	/
Project setting	8	PUMPd_TIMER	[0]Disable; [1]Enable	Disable	/
Project setting	21	ZONE_B_HT_TD	[0] Radiator; [1] Fan coil unit; [2] Floor heating	Floor heating	/
Project setting	40	UNIT_MAX	1~8	1	/
Project setting	41	DHW_UNIT_NUM	1~8	1	/
Project setting	43	PUMPo_FUNCTION	[0]Zone A External Circulation Pump;[1]Zone A&B External Circulation Pump	Zone A External Circulation Pump	/
Project setting	46	BMS_DATA_FMT	[0]8,N,1;[1]8,N,2;[2]8,O,1;[3]8,E,1	8,N,1	/
Project setting	47	BMS_BAUDRATE	[0]2400;[1]4800;[2]9600;[3]19200;[4]38400;[5]57600	9600	/
Project setting	48	BMS_ADDR	1~247	1	/

ANNEX B. Resistance table

R—T CONVERSION TABLE

Part No. ; 150-103-98***
R25 ; 10.0 kΩ (Tolerance 1 %)
B25/50 ; 3950 K (Tolerance 1 %)

t [°C]	Rmin. [kΩ]	Rnom. [kΩ]	Rmax. [kΩ]
-30	170.0	176.7	183.6
-29	160.2	166.3	172.7
-28	150.9	156.6	162.5
-27	142.2	147.5	153.0
-26	134.0	139.0	144.1
-25	126.4	131.0	135.7
-24	119.2	123.5	127.8
-23	112.5	116.4	120.5
-22	106.2	109.9	113.6
-21	100.3	103.7	107.1
-20	94.70	97.86	101.1
-19	89.40	92.33	95.35
-18	84.44	87.15	89.95
-17	79.78	82.30	84.88
-16	75.40	77.74	80.14
-15	71.30	73.46	75.69
-14	67.44	69.45	71.51
-13	63.81	65.68	67.59
-12	60.40	62.13	63.91
-11	57.20	58.80	60.45
-10	54.18	55.67	57.20
-9	51.34	52.72	54.14
-8	48.67	49.95	51.26
-7	46.15	47.34	48.56
-6	43.77	44.88	46.01
-5	41.54	42.56	43.61
-4	39.43	40.38	41.35
-3	37.43	38.32	39.22
-2	35.56	36.38	37.21
-1	33.78	34.55	35.32
0	32.11	32.82	33.54
1	30.53	31.18	31.85
2	29.03	29.64	30.26
3	27.62	28.18	28.76
4	26.28	26.81	27.34
5	25.02	25.50	26.00
6	23.82	24.27	24.73
7	22.69	23.11	23.53
8	21.62	22.00	22.39
9	20.60	20.96	21.32
10	19.64	19.97	20.31
11	18.73	19.03	19.34
12	17.86	18.15	18.43
13	17.04	17.31	17.57
14	16.27	16.51	16.75
15	15.53	15.75	15.98
16	14.83	15.03	15.24
17	14.16	14.35	14.54
18	13.53	13.71	13.88

OHIZUMI MFG. CO, . LTD

Part No. ; 150-103-98***

t [℃]	Rmin. [kΩ]	Rnom. [kΩ]	Rmax. [kΩ]
19	12.93	13.09	13.25
20	12.36	12.51	12.66
21	11.82	11.96	12.09
22	11.30	11.43	11.55
23	10.81	10.93	11.04
24	10.34	10.45	10.56
25	9.900	10.00	10.10
26	9.470	9.569	9.669
27	9.061	9.160	9.259
28	8.671	8.770	8.869
29	8.301	8.399	8.498
30	7.949	8.046	8.144
31	7.613	7.710	7.807
32	7.294	7.390	7.486
33	6.990	7.084	7.179
34	6.700	6.794	6.888
35	6.424	6.516	6.609
36	6.161	6.252	6.344
37	5.910	6.000	6.090
38	5.670	5.759	5.848
39	5.442	5.529	5.617
40	5.224	5.310	5.397
41	5.016	5.101	5.186
42	4.818	4.901	4.985
43	4.628	4.710	4.792
44	4.447	4.527	4.608
45	4.274	4.353	4.432
46	4.109	4.186	4.264
47	3.950	4.026	4.103
48	3.799	3.874	3.949
49	3.655	3.728	3.802
50	3.516	3.588	3.661
51	3.384	3.454	3.526
52	3.258	3.326	3.396
53	3.136	3.204	3.272
54	3.020	3.086	3.154
55	2.909	2.974	3.040
56	2.803	2.866	2.931
57	2.701	2.763	2.826
58	2.603	2.664	2.726
59	2.509	2.569	2.629
60	2.419	2.478	2.537
61	2.333	2.390	2.448
62	2.250	2.306	2.363
63	2.171	2.226	2.282
64	2.095	2.148	2.203
65	2.022	2.074	2.128
66	1.952	2.003	2.055
67	1.884	1.935	1.986
68	1.820	1.869	1.919
69	1.758	1.806	1.855
70	1.698	1.745	1.793

OHIZUMI MFG. CO, . LTD

Part No. ; 150-103-98***

t [℃]	Rmin. [kΩ]	Rnom. [kΩ]	Rmax. [kΩ]
71	1.641	1.686	1.733
72	1.585	1.630	1.676
73	1.532	1.576	1.621
74	1.481	1.524	1.568
75	1.432	1.474	1.517
76	1.385	1.426	1.468
77	1.340	1.380	1.421
78	1.296	1.335	1.376
79	1.254	1.293	1.332
80	1.214	1.251	1.290
81	1.175	1.212	1.249
82	1.137	1.173	1.210
83	1.101	1.136	1.172
84	1.066	1.101	1.136
85	1.033	1.066	1.101
86	1.001	1.034	1.067
87	0.9694	1.002	1.035
88	0.9395	0.9714	1.004
89	0.9108	0.9419	0.9740
90	0.8830	0.9135	0.9449
91	0.8563	0.8861	0.9168
92	0.8304	0.8596	0.8897
93	0.8055	0.8341	0.8636
94	0.7815	0.8094	0.8383
95	0.7583	0.7856	0.8139
96	0.7358	0.7626	0.7903
97	0.7142	0.7404	0.7675
98	0.6933	0.7189	0.7454
99	0.6731	0.6982	0.7242
100	0.6536	0.6782	0.7036
101	0.6347	0.6588	0.6837
102	0.6165	0.6401	0.6644
103	0.5989	0.6220	0.6458
104	0.5819	0.6045	0.6278
105	0.5654	0.5875	0.6104

OHIZUMI MFG. CO, . LTD

R−T CONVERSION TABLE

Part No. ;
R100 ; 3.77 kΩ (Tolerance 2.4 %)
B0/100 ; 3979 K (Tolerance 1 %)

t [°C]	Rmin. [kΩ]	Rnom. [kΩ]	Rmax. [kΩ]
−30	904.1	979.3	1060
−29	851.7	922.0	997.4
−28	802.7	868.3	938.8
−27	756.7	818.2	884.1
−26	713.7	771.2	832.8
−25	673.4	727.2	784.8
−24	635.6	685.9	739.8
−23	600.1	647.2	697.7
−22	566.8	611.0	658.3
−21	535.5	577.0	621.2
−20	506.2	545.0	586.5
−19	478.6	515.0	553.9
−18	452.7	486.8	523.3
−17	428.3	460.4	494.6
−16	405.4	435.5	467.6
−15	383.8	412.1	442.2
−14	363.5	390.1	418.4
−13	344.4	369.4	395.9
−12	326.4	349.9	374.8
−11	309.4	331.5	354.9
−10	293.4	314.2	336.2
−9	278.4	297.9	318.6
−8	264.1	282.5	302.0
−7	250.7	268.0	286.4
−6	238.1	254.4	271.6
−5	226.1	241.5	257.7
−4	214.8	229.3	244.6
−3	204.1	217.8	232.2
−2	194.1	206.9	220.5
−1	184.5	196.7	209.5
0	175.5	187.0	199.0
1	166.9	177.7	189.1
2	158.8	169.0	179.7
3	151.2	160.8	170.9
4	143.9	153.0	162.5
5	137.0	145.6	154.6
6	130.5	138.6	147.1
7	124.4	132.0	140.0
8	118.6	125.8	133.3
9	113.0	119.8	127.0
10	107.8	114.2	121.0
11	102.8	108.9	115.3
12	98.08	103.9	109.9
13	93.61	99.09	104.8
14	89.37	94.56	100.0
15	85.34	90.26	95.40
16	81.52	86.17	91.04
17	77.89	82.30	86.91
18	74.44	78.62	82.98

OHIZUMI MFG. CO, . LTD

Part No. ;

t [℃]	Rmin. [kΩ]	Rnom. [kΩ]	Rmax. [kΩ]
19	71.16	75.12	79.25
20	68.04	71.80	75.71
21	65.08	68.64	72.35
22	62.26	65.64	69.15
23	59.58	62.78	66.12
24	57.03	60.06	63.23
25	54.60	57.48	60.48
26	52.28	55.02	57.87
27	50.08	52.68	55.38
28	47.98	50.45	53.01
29	45.98	48.32	50.76
30	44.07	46.30	48.61
31	42.25	44.37	46.56
32	40.52	42.53	44.62
33	38.87	40.78	42.76
34	37.29	39.11	40.99
35	35.78	37.51	39.30
36	34.35	35.99	37.69
37	32.97	34.54	36.15
38	31.66	33.15	34.69
39	30.41	31.83	33.29
40	29.21	30.56	31.95
41	28.07	29.35	30.68
42	26.98	28.20	29.46
43	25.93	27.10	28.29
44	24.93	26.04	27.18
45	23.98	25.03	26.12
46	23.06	24.07	25.10
47	22.19	23.14	24.13
48	21.35	22.26	23.20
49	20.55	21.42	22.31
50	19.78	20.61	21.46
51	19.04	19.83	20.64
52	18.33	19.09	19.86
53	17.66	18.38	19.11
54	17.01	17.70	18.40
55	16.39	17.04	17.71
56	15.79	16.42	17.06
57	15.22	15.82	16.43
58	14.68	15.24	15.82
59	14.15	14.69	15.25
60	13.65	14.16	14.69
61	13.16	13.66	14.16
62	12.70	13.17	13.65
63	12.26	12.71	13.16
64	11.83	12.26	12.70
65	11.42	11.83	12.25
66	11.02	11.42	11.82
67	10.64	11.02	11.40
68	10.28	10.64	11.00
69	9.928	10.27	10.62
70	9.592	9.923	10.26

OHIZUMI MFG. CO, . LTD

Part No. ;

t [°C]	Rmin. [kΩ]	Rnom. [kΩ]	Rmax. [kΩ]
71	9.269	9.586	9.907
72	8.959	9.261	9.569
73	8.660	8.949	9.243
74	8.373	8.650	8.931
75	8.096	8.361	8.630
76	7.830	8.084	8.341
77	7.574	7.817	8.063
78	7.328	7.560	7.795
79	7.091	7.313	7.538
80	6.862	7.075	7.290
81	6.642	6.846	7.051
82	6.430	6.625	6.822
83	6.226	6.412	6.601
84	6.029	6.208	6.388
85	5.839	6.010	6.183
86	5.656	5.820	5.985
87	5.480	5.637	5.795
88	5.310	5.461	5.612
89	5.146	5.290	5.435
90	4.988	5.126	5.265
91	4.836	4.968	5.101
92	4.688	4.815	4.942
93	4.546	4.668	4.789
94	4.409	4.525	4.642
95	4.277	4.388	4.500
96	4.149	4.256	4.363
97	4.026	4.128	4.230
98	3.906	4.004	4.102
99	3.791	3.885	3.979
100	3.680	3.770	3.860
101	3.570	3.659	3.747
102	3.464	3.551	3.638
103	3.362	3.447	3.533
104	3.263	3.347	3.431
105	3.168	3.250	3.333
106	3.076	3.156	3.237
107	2.986	3.066	3.145
108	2.900	2.978	3.056
109	2.817	2.893	2.970
110	2.736	2.811	2.887
111	2.658	2.732	2.806
112	2.583	2.655	2.728
113	2.510	2.581	2.652
114	2.439	2.509	2.579
115	2.371	2.439	2.508
116	2.305	2.372	2.440
117	2.241	2.307	2.373
118	2.179	2.244	2.309
119	2.119	2.183	2.247
120	2.061	2.123	2.186
121	2.005	2.066	2.128
122	1.950	2.010	2.071

Part No. ;

t [℃]	Rmin. [kΩ]	Rnom. [kΩ]	Rmax. [kΩ]
123	1.897	1.956	2.016
124	1.846	1.904	1.963
125	1.797	1.854	1.911
126	1.749	1.805	1.861
127	1.702	1.757	1.813
128	1.657	1.711	1.765
129	1.613	1.666	1.720
130	1.571	1.623	1.675

OHIZUMI MFG. CO, . LTD

ANNEX C. TA Compensation Curve

Table 1 Heating Low-Temp. Curve (Heating Ambient Temp. - Target Temp. Table) Unit: ℃

TA	≤-20	-19	-18	-17	-16	-15	-14	-13	-12	-11	-10	9	-8	-7	-6	-5	-4	-3	-2	-1	0
Low-Temperature Curve 1	38	38	38	38	38	37	37	37	37	37	37	36	36	36	36	36	36	35	35	35	35
Low-Temperature Curve 2	37	37	37	37	37	36	36	36	36	36	36	35	35	35	35	35	35	34	34	34	34
Low-Temperature Curve 3	36	36	36	35	35	35	35	35	35	34	34	34	34	34	34	33	33	33	33	33	33
Low-Temperature Curve 4	35	35	35	34	34	34	34	34	34	33	33	33	33	33	33	32	32	32	32	32	32
Low-Temperature Curve 5	34	34	34	33	33	33	33	33	33	32	32	32	32	32	32	31	31	31	31	31	31
Low-Temperature Curve 6	32	32	32	32	31	31	31	31	31	31	31	31	30	30	30	30	30	30	30	30	29
Low-Temperature Curve 7	31	31	31	31	30	30	30	30	30	30	30	30	29	29	29	29	29	29	29	29	28
Low-Temperature Curve 8	29	29	29	29	28	28	28	28	28	28	28	28	27	27	27	27	27	27	27	27	26
TA	**1**	**2**	**3**	**4**	**5**	**6**	**7**	**8**	**9**	**10**	**11**	**12**	**13**	**14**	**15**	**16**	**17**	**18**	**19**	**≥20**	
Low-Temperature Curve 1	35	35	34	34	34	34	34	34	33	33	33	33	33	33	32	32	32	32	32	32	
Low-Temperature Curve 2	34	34	33	33	33	33	33	33	32	32	32	32	32	32	31	31	31	31	31	31	
Low-Temperature Curve 3	32	32	32	32	32	32	31	31	31	31	31	31	30	30	30	30	30	30	29	29	
Low-Temperature Curve 4	31	31	31	31	31	31	30	30	30	30	30	30	29	29	29	29	29	29	28	28	
Low-Temperature Curve 5	30	30	30	30	30	30	29	29	29	29	29	29	28	28	28	28	28	28	27	27	
Low-Temperature Curve 6	29	29	29	29	29	29	28	28	28	28	28	28	27	27	27	27	27	27	26	26	
Low-Temperature Curve 7	28	28	28	28	28	28	27	27	27	27	27	27	26	26	26	26	26	26	25	25	
Low-Temperature Curve 8	26	26	26	26	26	26	26	25	25	25	25	25	25	25	25	24	24	24	24	24	

Table 2 Heating High-Temp. Curve (Heating Ambient Temp. - Target Temp. Table) Unit: ℃

TA	≤-20	-19	-18	-17	-16	-15	-14	-13	-12	-11	-10	9	-8	-7	-6	-5	-4	-3	-2	-1	0
High-Temp. Curve 1	55	55	55	55	54	54	54	54	54	54	54	54	53	53	53	53	53	53	53	53	52
High-Temp. Curve 2	53	53	53	53	52	52	52	52	52	52	52	52	51	51	51	51	51	51	51	51	50
High-Temp. Curve 3	52	52	52	52	51	51	51	51	51	51	51	51	50	50	50	50	50	50	50	50	49
High-Temp. Curve 4	50	50	50	50	49	49	49	49	49	49	49	49	48	48	48	48	48	48	48	48	47
High-Temp. Curve 5	48	48	48	48	47	47	47	47	47	47	47	47	46	46	46	46	46	46	46	46	45
High-Temp. Curve 6	45	45	45	45	44	44	44	44	44	44	44	44	43	43	43	43	43	43	43	43	42
High-Temp. Curve 7	43	43	43	43	42	42	42	42	42	42	42	42	41	41	41	41	41	41	41	41	40
High-Temp. Curve 8	40	40	40	40	39	39	39	39	39	39	39	39	38	38	38	38	38	38	38	38	37

TA	1	2	3	4	5	6	7	8	9	10	11	12	13	14	15	16	17	18	19	≥ 20	
High-Temp. Curve 1	52	52	52	52	52	52	52	51	51	51	51	51	51	51	51	50	50	50	50	50	
High-Temp. Curve 2	50	50	50	50	50	50	50	49	49	49	49	49	49	49	49	48	48	48	48	48	
High-Temp. Curve 3	49	49	49	49	49	49	49	48	48	48	48	48	48	48	48	47	47	47	47	47	
High-Temp. Curve 4	47	47	47	47	47	47	47	46	46	46	46	46	46	46	46	45	45	45	45	45	
High-Temp. Curve 5	45	45	45	45	45	45	45	44	44	44	44	44	44	44	44	43	43	43	43	43	
High-Temp. Curve 6	42	42	42	42	42	42	42	41	41	41	41	41	41	41	41	40	40	40	40	40	
High-Temp. Curve 7	40	40	40	40	40	40	40	39	39	39	39	39	39	39	39	38	38	38	38	38	
High-Temp. Curve 8	37	37	37	37	37	37	37	36	36	36	36	36	36	36	36	35	35	35	35	35	

Heating curve 9 is an automatically generated curve (a linear curve created by setting parameters), calculated as follows:

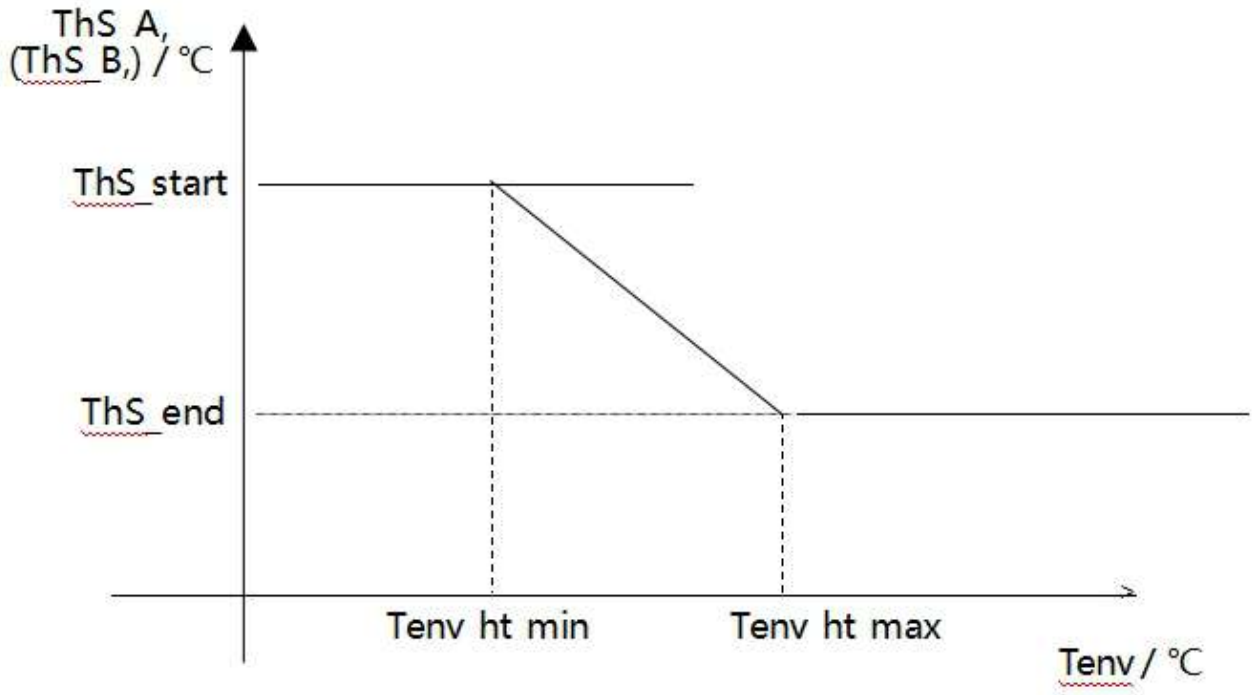

Among these，

Tenv_ht_max: MAX([Heating Ambient Temperature Compensation 1 for Curve 9], [Heating Ambient Temperature Compensation 2 for Curve 9])

Tenv_ht_min: MIN([Heating Ambient Temperature Compensation 1 for Curve 9], [Heating Ambient Temperature Compensation 2 for Curve 9])

ThS_end: MIN([Heating Outlet Water Temperature 2 for Curve 9], [Heating Outlet Water Temperature 1 for Curve 9])

ThS_start: MAX([Heating Outlet Water Temperature 2 for Curve 9], [Heating Outlet Water Temperature 1 for Curve 9])

Note: MAX(A,B) denotes the larger value between A and B;

MIN(A,B) denotes the smaller value between A and B.

Table 3 Cooling Low-Temperature Curve (Cooling Ambient Temperature - Target Temperature Table) Unit: °C

TA	-10≤TA<15	15≤TA<22	22≤TA<30	30≤TA
Low-Temperature Curve 1	16	11	8	5
Low-Temperature Curve 2	17	12	9	6
Low-Temperature Curve 3	18	13	10	7
Low-Temperature Curve 4	19	14	11	8
Low-Temperature Curve 5	20	15	12	9
Low-Temperature Curve 6	21	16	13	10
Low-Temperature Curve 7	22	17	14	11
Low-Temperature Curve 8	23	18	15	12

Table 4 Cooling High-Temperature Curve (Cooling Ambient Temperature - Target Temperature Table) Unit: °C

TA	-10≤TA<15	15≤TA<22	22≤TA<30	30≤TA
High-Temp. Curve 1	20	18	17	16
High-Temp. Curve 2	21	19	18	17
High-Temp. Curve 3	22	20	19	17
High-Temp. Curve 4	23	21	19	18
High-Temp. Curve 5	24	21	20	18
High-Temp. Curve 6	24	22	20	19
High-Temp. Curve 7	25	22	21	19
High-Temp. Curve 8	25	23	21	20

Cooling Curve 9 is an automatically generated curve (a linear curve created by setting parameters), calculated as follows:

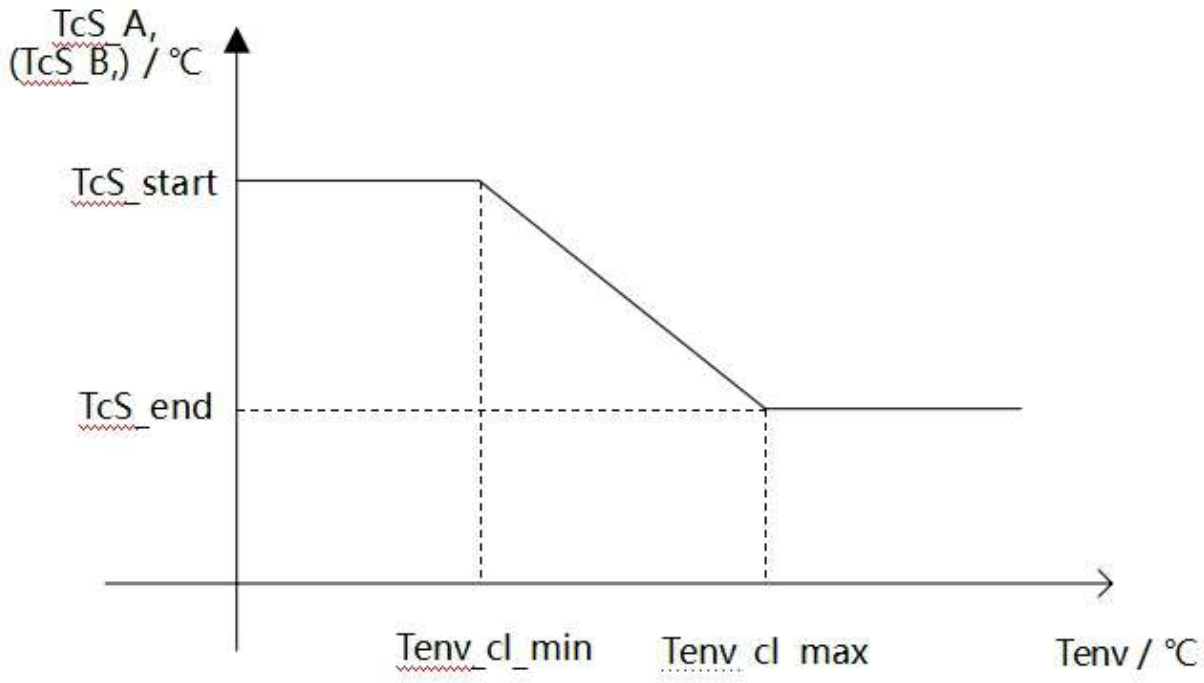

Among these,

Tenv_cl_max: MAX([Cooling Ambient Temperature Compensation 1 for Curve 9], [Cooling Ambient Temperature Compensation 2 for Curve 9])

Tenv_cl_min: MIN([Cooling Ambient Temperature Compensation 1 for Curve 9], [Cooling Ambient Temperature Compensation 2 for Curve 9])

TcS_end: MIN([Cooling Outlet Water Temperature 1 for Curve 9], [Cooling Outlet Water Temperature 2 for Curve 9])

TcS_start: MAX([Cooling Outlet Water Temperature 2 for Curve 9], [Cooling Outlet Water Temperature 1 for Curve 9])

Note: MAX(A,B) denotes the larger value between A and B;

MIN(A,B) denotes the smaller value between A and B.

Note:

iGarden

Thank you for choosing our ATW Heat Pump.